PRELIMINARY LAND DEVELOPMENT PLANS
FOR
ALL WASHED UP AUTO SPA
AT
1380 & 1396 N. ATHERTON STREET
TOWNSHIP OF FERGUSON
COUNTY OF CENTRE
COMMONWEALTH OF PENNSYLVANIA

ZONING INFORMATION

ZONING DISTRICT
ZONING DISTRICT: C
(COMMERCIAL)
A CAR WASH IS A PERMITTED USE WITHIN THIS ZONING DISTRICT.

ZONING INFORMATION WAS OBTAINED FROM:
FERGUSON TOWNSHIP PLANNING & ZONING
3147 RESEARCH DRIVE
STATE COLLEGE, PA 16801
(814) 238-4651
JENNA WARGO
DIRECTOR PLANNING & ZONING

ZONING	REQUIRED	PROPOSED
MIN. LOT AREA	5,000 SF	36,287 SF
MIN. LOT WIDTH	50'-0"	220.00'
MIN. FRONT YARD SETBACK (N. ATHERTON STREET) (W. NORTH HILLS PLACE)	50'-0"	 75'-7" 57'-6"
MIN. SIDE YARD SETBACK	15'-0"	52'-9"
MIN. REAR YARD SETBACK	20'-0"	42'-0"
MIN. FRONT PARKING SETBACK	12'-0"	12'-0"
MAX. BUILDING HEIGHT	40'-0"	26'-3"
MAX. LOT COVERAGE	45%	9.8%
MAX. IMPERVIOUS COVERAGE	80%	30.9%
SIDE YARD BUFFER SETBACK	15'-0"	15'-0"
REAR YARD BUFFER SETBACK	15'-0"	15'-0"

PARKING REQUIREMENTS

ZONING DISTRICT: C
(COMMERCIAL)

FOUR (4) PARKING SPACES ARE REQUIRED FOR EMPLOYEES AND DELIVERIES.
NUMBER OF SPACES REQUIRED: 4 REQUIRED
NUMBER OF SPACES PROVIDED: 3 PROVIDED*

* TWO (2) DESIGNATED PARKING SPACES AND ONE (1) SPACE AT STRIPED AREA.

PARKING STALL SIZE: 9' x 18' REQUIRED
9' x 18' PROVIDED
PARKING STALL SIZE PROVIDED: NINETEEN (19) 11' x 18' @ VACUUM ISLANDS (INCLUDES ONE ACCESSIBLE PARKING STALL)

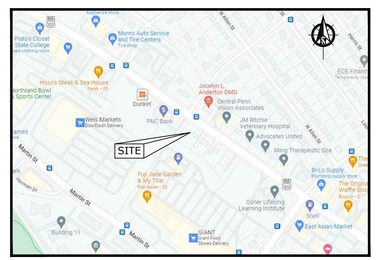

SITE LOCATION MAP
SCALE: 1" = 500'

FLOOD ZONE NOTE

By graphic plotting only, this site is located in Zone X of the Flood Insurance Rate Map 42027C0617F, Community No. 420270, Panel 0617, Suffix F, bearing an effective date of May 4, 2009 and is not in a special flood hazard area.

OWNER/DEVELOPER:

ALL WASHED UP AUTO SPA
833 SILVER CREEK ROAD
ST. MARY'S, PA 15857
(814) 834-9777
CHUCK DeLULLO

SURVEYOR:

MDM - SURVEYORS & ENGINEERS, LLC
375 NORTHGATE DRIVE
WARRENDALE, PA 15086
(724) 934-2810
CHRISTOPHER R. JACKSON
cjackson@mdmllc.com
PA LICENSE No.: SU075499

ENGINEER:

MDM - SURVEYORS & ENGINEERS, LLC
375 NORTHGATE DRIVE
WARRENDALE, PA 15086
(724) 934-2810
CHRISTOPHER M. PETERS, PE
PA LICENSE No.: PE060187

GENERAL NOTES

1. Bearings shown hereon are based on the bearings described for Tax Parcel 24-012-023 recorded in Deed Book 2258, page 462, in the Centre County Recorder of Deeds office.

2. The underground utilities shown on this survey have been located from field survey information, markings provided by the utility companies and existing drawings obtained from utility companies. The surveyor makes no guarantee that the underground utilities shown comprise all such utilities in the area, either in service or abandoned. The surveyor further does not warrant that the underground utilities shown are in the exact location indicated, although he does certify that they are located as accurately as possible from available information.

3. Contour Interval = 1'. Elevations shown hereon are based upon GPS observations on October 20, 2021, and are to the North American Vertical Datum of 1988 (NAVD88)(GEOID12a).

4. There was no observed evidence of current earth moving work, building construction or building additions.

5. The surveyor knows of no known recent or proposed changes in street right-of-way lines, street or sidewalk construction or repairs.

6. There is no observed evidence of this site being used as a solid waste dump, sump, or sanitary landfill.

7. Iron pins with cap set are 5/8" ø rebar, 30" in length with a yellow plastic I.D. cap that bears the inscription "MDM 724-934-2810".

8. Basis of Legal Right of Way is PennDOT State Route 3014 Right-of-Way Drawings (MPMS No. 98126), Recorded as H02017-0003

9. Contact PennDOT District 2 for Permitting and Right-of-Way information:

Right-of-Way
70 PennDOT Drive
Clearfield, PA 16830
(814) 765-0467
Clifton Charles
cclarles@pa.gov

Centre County
1000 E Bishop St.
Bellefonte, Pa. 16823
(814) 355-4731
Permits: (814) 765-0512

DRAWING INDEX

CS	COVER SHEET
1 of 1	EXISTING CONDITIONS SURVEY
TS-1	TREE SURVEY PLAN
SP-1	DEMOLITION PLAN
SP-2	SITE PLAN
SP-3	CONCEPT STORMWATER PLAN
SP-4	SITE UTILITY PLAN
SP-5	SITE DETAILS
SP-6	LANDSCAPE PLAN

PREPARED BY:
MDM
SURVEYORS & ENGINEERS, LLC
Surveyors • Engineers • Site Planners
375 Northgate Drive
Warrendale, PA 15086
Ph: (724) 934-2810 Fax: (724) 934-2811
mdmcadd@mdmllc.com
www.mdmllc.com

Issue Date: 8/29/2022

UTILITY CONTACTS

SANITARY SEWER
BOROUGH OF STATE COLLEGE SEWER AUTHORITY
243 SOUTH ALLEN STREET
STATE COLLEGE, PA 16801
(814) 234-7140
AMY KERNER
akerner@statecollegepa.us

GAS SERVICE
COLUMBIA GAS, PA
1020 NORTH HARTLEY STREET
YORK, PA 17404
(717) 849-0160
NED LEPPO
nleppo@nisource.com

WATER SERVICE
STATE COLLEGE BOROUGH WATER AUTHORITY
1201 WEST BRANCH ROAD
STATE COLLEGE, PA 16801
(814) 238-6766

STORM SEWER
UNIVERSITY AREA JOINT AUTHORITY
1576 SPRING VALLEY ROAD
STATE COLLEGE, PA 16801
(814) 238-5361 EXT. 7715
MARK HARTER
mharter@uaja.com

CABLE SERVICE
PETE FOURNIER
COMCAST BUSINESS SERVICES
NORTHEAST DIVISION HQ
676 ISLAND POND ROAD
MANCHESTER, NH 03109
(603) 541-1099

ELECTRIC SERVICE
WEST PENN POWER CO.
2800 EAST COLLEGE AVENUE
STATE COLLEGE, PA 16801
(814) 231-5355

STORM SEWER
FERGUSON TOWNSHIP PUBLIC WORKS
3147 RESEARCH DRIVE
STATE COLLEGE, PA 16801
(814) 238-4651
DAVID MODRICKER, P.E.

TELEPHONE SERVICE
VERIZON, PA
250 SOUTH ALLEN STREET
(814) 231-6565
877-596-7577

SEAL
COMMONWEALTH OF PENNSYLVANIA
REGISTERED PROFESSIONAL
CHRISTOPHER M PETERS
ENGINEER
PE060187

REV	DATE	DESCRIPTION	BY

ALL WASHED UP AUTO SPA

PREPARED BY:
MDM
SURVEYORS & ENGINEERS, LLC
Surveyors • Engineers • Site Planners
375 Northgate Drive
Warrendale, PA 15086
Ph: (724) 934-2810 Fax: (724) 934-2811
mdmcadd@mdmllc.com
www.mdmllc.com

CLIENT:
ALL WASHED UP AUTO SPA

PROJECT:
1380 & 1386 N. ATHERTON STREET
TOWNSHIP OF FERGUSON, COUNTY OF CENTRE
COMMONWEALTH OF PENNSYLVANIA

SHEET TITLE
COVER SHEET

DRAWN BY: CWT
CHECKED BY: CMP
ISSUE DATE: 8-29-2022

SHEET NUMBER
CS

COPYRIGHT 2021 - MDM, LLC 8/29/2022 - 3:07pm W:\All Washed Up Auto Spa\Site Design\PRD\CS1 Sheet.dwg

GENERAL NOTES

1. Bearings shown hereon are based on the bearings described for Tax Parcel 24-012-023 recorded in Deed Book 2258, page 462, in the Centre County Recorder of Deeds office.

2. The underground utilities shown on this survey have been located from field survey information, markings provided by the utility companies and existing drawings obtained from utility companies. The surveyor makes no guarantee that the underground utilities shown comprise all such utilities in the area, either in service or abandoned. The surveyor further does not warrant that the underground utilities shown are in the exact location indicated, although he does certify that they are located as accurately as possible from available information.

3. Contour Interval = 1'. Elevations shown hereon are based upon GPS observations on October 20, 2021, and are to the North American Vertical Datum of 1988 (NAVD88)(GEOID12a).

4. There was no observed evidence of current earth moving work, building construction or building additions.

5. The surveyor knows of no known recent or proposed changes in street right-of-way lines, street or sidewalk construction or repairs.

6. There is no observed evidence of this site being used as a solid waste dump, sump, or sanitary landfill.

7. Iron pins with cap set are 5/8"Ø rebar, 30" in length with a yellow plastic I.D. cap that bears the inscription "MDM 724-934-2810".

8. Basis of Legal Right of Way is PennDOT State Route 3014 Right-of-Way Drawings (MPMS No. 98126), Recorded as H02017-0003

9. Contact PennDOT District 2 for Permitting and Right-of-Way information:

Right-of-Way	Centre County
70 PennDOT Drive	1000 E Bishop St.
Clearfield, PA 16830	Bellefonte, Pa. 16823
(814) 765-0467	(814) 355-4731
Clifton Charles	Permits: (814) 765-0512
ccharles@pa.gov	

SCHEDULE B - SECTION 2 ITEMS

This item will be addressed upon receipt of the current title commitment for the subject premises.

VISIBLE ENCROACHMENTS

There are no noticeable encroachments at the time of the field survey.

FLOOD ZONE NOTE

By graphic plotting only, this site is located in Zone X of the Flood Insurance Rate Map 42027C0617F, Community No. 420270, Panel 0617, Suffix F, bearing an effective date of May 4, 2009 and is not in a special flood hazard area.

LEGAL DESCRIPTION

This item will be addressed upon receipt of the current title commitment for the subject premises.

SITE LOCATION MAP
SCALE: NOT TO SCALE

ZONING INFORMATION

Zoning District - C (General Commercial)
A car wash is a permitted use within this zoning district.

Minimum Lot Size - 5,000 Sq. Ft.
Minimum Lot Width - 50 feet
Minimum Front Yard Setback - 50 feet
Minimum Side Yard Setback - 15 feet
Minimum Rear Yard Setback - 20 feet
Maximum Building Height - 40 feet
Maximum Lot Coverage - 45%
Maximum Impervious Coverage - 80%
Minimum Front Parking Setback - 12 feet
Side Yard Buffer Setback - 15 feet
Rear Yard Buffer Setback - 15 feet

Parking Requirements

Parking Formula - Requires parking study per Planning Commission

Zoning information was obtained from:

Ferguson Township Planning & Zoning
3147 Research Drive
State College, PA 16801
(814) 238-4651
Jenna Wargo
Director Planning & Zoning

Zoning Notes:

1. There are a 11 striped parking spaces, including 1 striped accessible space located on the site. Further investigation may be required to determine compliance to ADA standards and is beyond the scope of this survey.

UTILITY SERVICE INFORMATION

Sanitary Sewer
Borough of State College
Sewer Authority
243 South Allen St.
State College, PA 16801
(814) 234-7140
Amy Kerner
akerner@statecollegepa.us

Gas Service
Columbia Gas, PA
1020 North Hartley St.
York, PA 17404
(717) 849-0160
Ned Leppo
nleppo@nisource.com

Water Service
State College Borough
Water Authority
1201 W Branch Rd
State College, PA 16801
(814) 238-6766

Storm Sewer
University Area Joint Authority
1576 Spring Valley Rd
State College, PA 16801
(814) 238-5361 ext. 7715
Mark Harter
mharter@uaja.com

Cable Service
Pete Fournier
Comcast Business Services
Northeast Division HQ
676 Island Pond Road,
Manchester, NH 03109
(603) 541-1099

Electric Service
West Penn Power Co.
2800 East College Ave.
State College, PA 16801
(814) 231-5355

Storm Sewer
Ferguson Township Public Works
3147 Research Drive
State College, PA 16801
(814) 238-4651
David Modricker, P.E.

Telephone Service
Verizon, PA
250 South Allen St.
State College, PA 16801
(814) 231-6565
(877) 596-7577

PA ONE-CALL INFORMATION

Serial Number: 20212860672 (Design) 20212860668 (Dig)
Date of Inquiry: 10/13/2021
How Contacted: On-line

Company Name	Response: All Clear	Has Facilities	Plans	Field Markings	No Response
COLUMBIA GAS		X	X	X	
COMCAST CABLE	X				
VERIZON TELEPHONE	X				
FERGUSON TWP. PUBLIC WORKS		X		X	
WEST PENN POWER		X	X	X	
PENNSYLVANIA ELECTRIC		X	X	X	
PENN STATE UNIVERSITY	X				
STATE COLLEGE BOROUGH WATER		X		X	
UNIVERSITY AREA JOINT AUTHORITY		X		X	

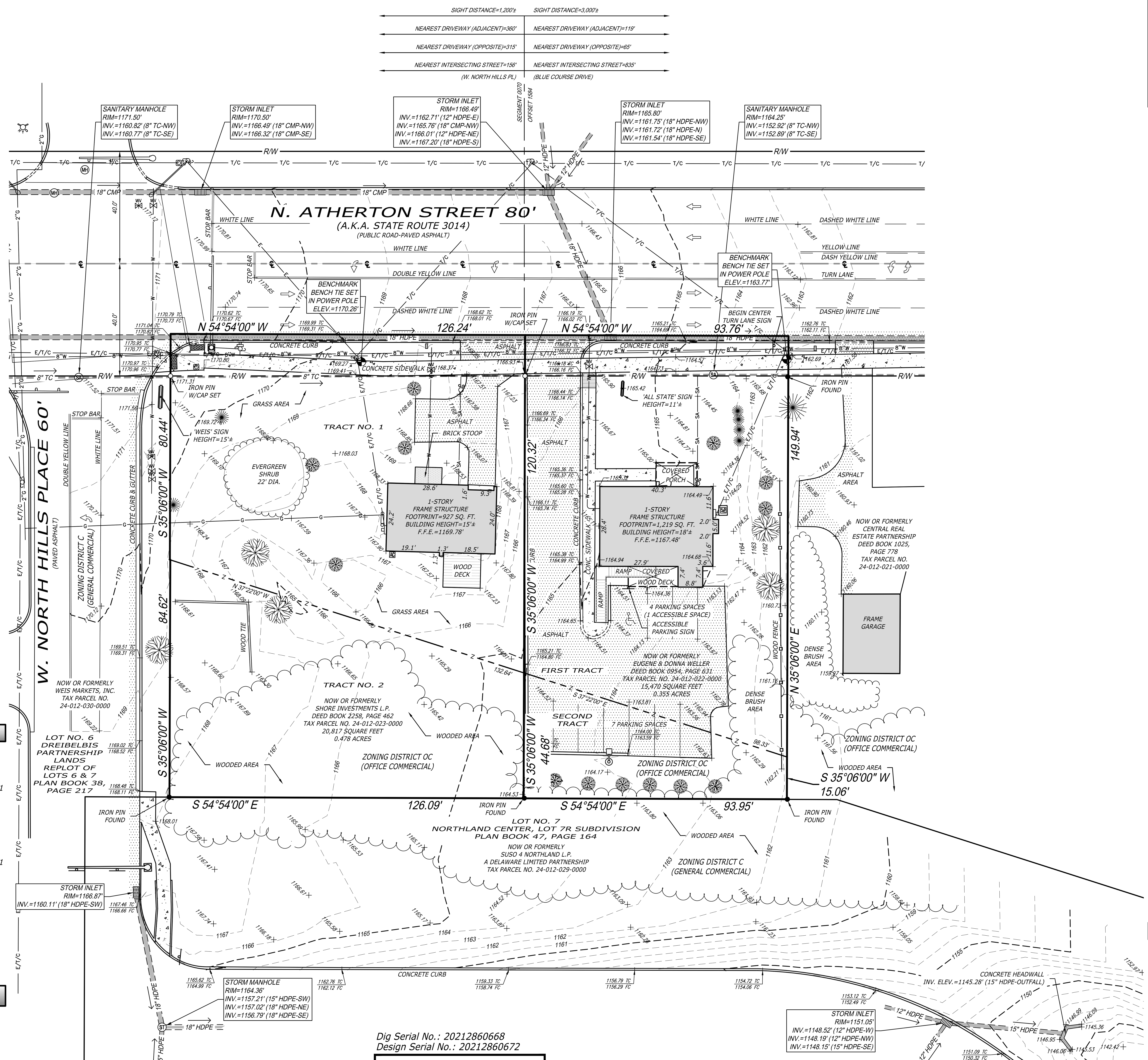

Dig Serial No.: 20212860668
Design Serial No.: 20212860672

CALL BEFORE YOU DIG !
PENNSYLVANIA LAW REQUIRES 3 WORKING DAYS NOTICE FOR CONSTRUCTION PHASE AND 10 WORKING DAYS IN DESIGN STAGE - STOP CALL
PENNSYLVANIA ONE CALL SYSTEM, INC.
1-800-242-1776

GRAPHIC SCALE
20 0 10 20 40 80
(IN FEET)
1 inch = 20 ft.

LEGEND OF SYMBOLS

Contour Line; Water Line; Gas Line; Overhead Electric, Telephone & Cable Line; Overhead Telephone & Cable Line; Overhead Electric Line; Storm Sewer; Sanitary Sewer; Easements; Setback Line; Depressed Curb; Wooden/Vinyl Fence; Guard Rail; Tree Line; Signal Poles; Sign Poles; Street Light; Sanitary Manhole; Iron pin w/cap set (Unless otherwise noted); Iron Pin Found; Cleanout; Gas Meter; Storm Manhole; Gas Valve; Storm Inlet; Water Valve; Manhole; Fire Hydrant; Traffic Signal Base; Electric Meter; Sign; Utility Pole; Illuminated Signs; Guy Wire; Light Pole; AC Unit; Spot Elevation (+1165.07); Traffic Light; Existing Curb Elevations: TC=Top of Curb, FC=Bottom of Curb (1165.50 TC / 1165.00 FC); Traffic Flow Arrow; Turn Arrows; Benchmark; Handicap Symbol; Truncated Domes; Shrub; Trees; Asphalt; Concrete; Gravel; Brick

Right-of-Way	R/W
Terra Cotta	T.C.
Polyvinyl Chloride	PVC
High Density Polyethylene	HDPE
Finished Floor Elevation	F.F.E.
Corrugated Metal Pipe	CMP
Reinforced Concrete Pipe	RCP

SURVEYOR'S CERTIFICATION

All Washed Up Auto Spa
1380 & 1386 N. Atherton Street
Township of Ferguson, County of Centre
Commonwealth of Pennsylvania

Certified To: All Washed Up Auto Spa

This is to certify that this map or plat and the survey on which it is based were made in accordance with the 2021 Minimum Standard Detail Requirements for ALTA/NSPS Land Title Surveys, jointly established and adopted by ALTA and NSPS, and includes Items 1, 2, 3, 4, 5, 6)a, 6)b, 7)a, 8, 9, 10, 11)a, 13 and 16-19 of Table A thereof. The fieldwork was completed on October 20, 2021.

Date of Plat or Map: July 27, 2022

Christopher R. Jackson, PLS
Professional Land Surveyor No. SU075499
In The Commonwealth of Pennsylvania

REVISIONS

NO.	DATE	DESCRIPTION	BY
1	11/15/2021	ORIGINAL SUBMITTAL	BJC
2	7/27/2022	PER ZONING INFO.	CWT

THIS SURVEY WAS PREPARED WITHOUT THE BENEFIT OF A TITLE REPORT, UNLESS SPECIFICALLY NOTED HEREON, AND NO WARRANTY IS MADE OR IMPLIED THAT ALL ENCUMBRANCES BURDENING THIS PROPERTY HAVE BEEN SHOWN.

THIS PLAN OR PLAT OF SURVEY IS ONLY VALID TO THE PARTIES CERTIFIED HEREON.

THIS PLAN OR PLAT OF SURVEY IS ONLY VALID IF ACCOMPANIED BY SEAL AND SIGNATURE OF THE LICENSED PROFESSIONAL OF RECORD.

ANY ALTERATIONS TO THIS PLAN OR PLAT OF SURVEY MADE AFTER BEING SIGNED AND SEALED BY SAID LICENSED PROFESSIONAL RENDERS THIS PLAN OR PLAT OF SURVEY NULL AND VOID.

MDM
SURVEYORS & ENGINEERS, LLC
Surveyors • Engineers • Site Planners
375 Northgate Drive
Warrendale, PA 15086
Ph: (724) 934-2810 Fax: (724) 934-2811
mdmsurvey@mdmllc.com
www.mdmllc.com

All Washed Up Auto Spa
1380 & 1386 N. Atherton Street
Township of Ferguson, County of Centre
Commonwealth of Pennsylvania

EXISTING CONDITIONS SURVEY

COMMONWEALTH OF PENNSYLVANIA
REGISTERED PROFESSIONAL
CHRISTOPHER R. JACKSON
LAND SURVEYOR
No. SU075499

SCALE:	1"=20'
DATE:	7/27/2022
DRAWN BY:	BJC
CHK'D BY:	CRJ

SHEET 1 of 1
Project No. 9448

PLANT INVENTORY - ALL WASHED UP SITE - FERGUSON TOWNSHIP

KEY NO.	BOTANICAL NAME	COMMON NAME	TYPE	REMARKS
1	PICEA PUNGENS	COLORADO BLUE SPRUCE	LARGE EVERGREEN	DEAD
2	PICEA PUNGENS	COLORADO BLUE SPRUCE	LARGE EVERGREEN	DEAD
3	TAXUS CUSPIDATA	JAPANESE YEW	EVERGREEN SHRUB	
4	ACER PLATANOIDES	NORWAY MAPLE	DECIDUOUS CANOPY	MULTI-STEM
5	QUERCUS ALBA	WHITE OAK	DECIDUOUS CANOPY	24" D.B.H.
6	LONICERA SPP.	SHRUB HONEYSUCKLE	DECIDUOUS SHRUB	INVASIVE SPECIES
7	LONICERA SPP.	SHRUB HONEYSUCKLE	DECIDUOS SHRUB	INVASIVE SPECIES
8	EUONYMUS JAPONICUS	GREENSPIRE EUONYMUS	EVERGREEN SHRUB	
9	QUERCUS ALBA	WHITE OAK	DECIDUOUS CANOPY	24" D.B.H.
10	RHODODENDRON CATAWBIENSE	CATAWBA RHODODENDRON	EVERGREEN SHRUB	
11	ROSA MULTIFLORA	MULTIFLORA ROSE	DECIDUOUS SHRUB	INVASIVE SPECIES
12	NOT USED			
13	PICEA PUNGENS	COLORADO BLUE SPRUCE	LARGE EVERGREEN	DEAD
14	EUONYMUS JAPONICUS	GREENSPIRE EUONYMUS	EVERGREEN SHRUB	
15	AMELANCHIER CANDENSIS	SERVICEBERRY	UNDERSTORY TREE	4" D.B.H.
16	HYDRANGEA PANICULATA	PANICLE HYGRANGEA	UNDERSTORY TREE	6" D.B.H.
17	MALUS SPP.	FLOWERING CRAB	UNDERSTORY TREE	6" D.B.H.
18	MALUS SPP.	FLOWERING CRAB	UNDERSTORY TREE	6" D.B.H.
19	EUONYMUS ALATUS	BURNING BUSH	DECIDUOUS SHRUB	
20	EUONYMUS ALATUS	BURNING BUSH	DECIDUOUS SHRUB	
21	MALUS SPP.	FLOWERING CRAB	UNDERSTORY TREE	6" D.B.H.
22	MAHONIA AQUIFOLIUM	OREGON GRAPE HOLLY	EVERGREEN SHRUB	
23	ACER RUBRUM	RED MAPLE	CANOPY TREE	12" D.B.H.
24	PRUNUS SEROTINA	BLACK CHERRY	CANOPY TREE	10" D.B.H.
25	TSUGA CANADENSIS	EASTERN HEMLOCK	EVERGREEN TREE	12" D.B.H.
26	ACER RUBRUM	RED MAPLE	CANOPY TREE	MULTI-STEM 8" D.B.H.
27	PICEA PUNGENS	COLORADO BLUE SPRUCE	LARGE EVERGREEN	DEAD
28	RHODODENDRON SPP.	AZALEA	EVERGREEN SHRUB	
29	TAXUS CUSPIDATA	JAPANESE YEW	EVERGREEN SHRUB	
30	RHODODENDRON CATAWBIENSE	CATAWBA RHODODENDRON	EVERGREEN SHRUB	
31	PRUNUS SEROTINA	BLACK CHERRY	CANOPY TREE	10" D.B.H.
32	MALUS SPP.	FLOWERING CRAB	UNDERSTORY TREE	6" D.B.H.
33	MALUS SPP.	FLOWERING CRAB	UNDERSTORY TREE	6" D.B.H.
34	MALUS SPP.	FLOWERING CRAB	UNDERSTORY TREE	6" D.B.H.
35	MACLURA POMIFERA	OSAGE ORANGE	UNDERSTORY TREE	8" D.B.H.
36	ACER RUBRUM	RED MAPLE	CANOPY TREE	12" D.B.H.
37	ACER RUBRUM	RED MAPLE	CANOPY TREE	12" D.B.H.
38	PYRUS CALLEEYANA	CALLERY PEAR	UNDERSTORY TREE	8" D.B.H.

PLANT INVENTORY - ALL WASHED UP SITE - FERGUSON TOWNSHIP
WOOD LOT #1

BOTANICAL NAME	COMMON NAME	TYPE	REMARKS
PINUS STROBUS	WHITE PINE	LARGE EVERGREEN	30" D.B.H.
LONICERA SPP.	SHRUB HONEYSUCKLE	DECIDUOS SHRUB	INVASIVE SPECIES
VITIS VINIFERA	COMMON GRAPE VINE	VINE	INVASIVE SPECIES
ACER RUBRUM	RED MAPLE	CANOPY TREE	24" D.B.H.
SASSAFRAS ALBIDUM	SASSAFRAS	DECIDUOUS TREE	10" D.B.H.
LIGUSTRUM VULGARE	COMMON PRIVET	DECIDUOUS SHRUB	INVASIVE SPECIES
RHAMNUS CATHARTICA	COMMON BUCKTHORN	DECIDUOUS SHRUB	INVASIVE SPECIES
QUERCUS ALBA	WHITE OAK	CANOPY TREE	24" D.B.H.
PARTHENOCISSIS QUINQHEFOLIA	VIRGINA CREEPER	VINE	INVASIVE SPECIES
PICEA PUNGENS	COLORADO BLUE SPRUCE	LARGE EVERGREEN	DEAD

PLANT INVENTORY - ALL WASHED UP SITE
FERGUSON TOWNSHIP - WOOD LOT #2

BOTANICAL NAME	COMMON NAME	TYPE	REMARKS
PINUS STROBUS	WHITE PINE	LARGE EVERGREEN	30" D.B.H.
ACER PLATANOIDES	NORWAY MAPLE	CANOPY TREE	12" D.B.H.

PA ONE-CALL INFORMATION

Serial Number: 20212860672 (Design) 20212860668 (Dig)
Date of Inquiry: 10/13/2021
How Contacted: On-line

Company Name	Response: All Clear	Has Facilities	Plans	Field Markings	No Response
COLUMBIA GAS		X	X	X	
COMCAST CABLE	X				
VERIZON TELEPHONE	X				
FERGUSON TWP. PUBLIC WORKS		X		X	
WEST PENN POWER		X	X	X	
PENNSYLVANIA ELECTRIC		X	X	X	
PENN STATE UNIVERSITY	X				
STATE COLLEGE BOROUGH WATER		X		X	
UNIVERSITY AREA JOINT AUTHORITY		X		X	

GRAPHIC SCALE

20 0 10 20 40 80

(IN FEET)
1 inch = 20 ft.

Dig Serial No.: 20212860668
Design Serial No.: 20212860672

CALL BEFORE YOU DIG !
PENNSYLVANIA LAW REQUIRES 3 WORKING DAYS NOTICE FOR CONSTRUCTION PHASE AND 10 WORKING DAYS IN DESIGN STAGE - STOP CALL
PENNSYLVANIA ONE CALL SYSTEM, INC.
1-800-242-1776

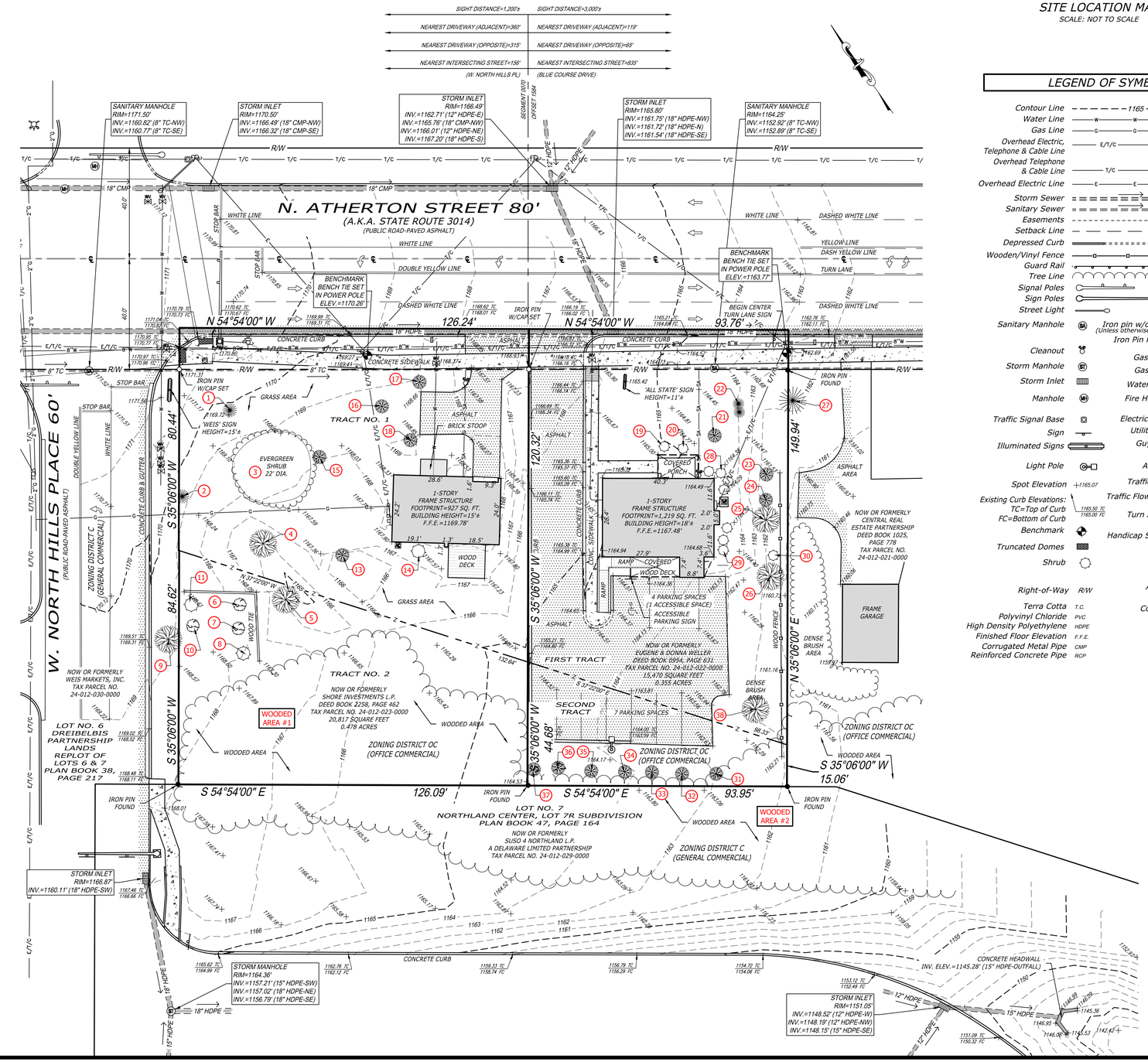

SITE LOCATION MAP
SCALE: NOT TO SCALE

LEGEND OF SYMBOLS

- Contour Line — 1165
- Water Line — W
- Gas Line — G
- Overhead Electric, Telephone & Cable Line — E/T/C
- Overhead Telephone & Cable Line — T/C
- Overhead Electric Line — E
- Storm Sewer
- Sanitary Sewer
- Easements
- Setback Line
- Depressed Curb
- Wooden/Vinyl Fence
- Guard Rail
- Tree Line
- Signal Poles
- Sign Poles
- Street Light
- Sanitary Manhole — Iron pin w/cap set (Unless otherwise noted)
- Iron Pin Found
- Cleanout
- Gas Meter
- Storm Manhole
- Gas Valve
- Storm Inlet
- Water Valve
- Manhole
- Fire Hydrant
- Traffic Signal Base
- Electric Meter
- Sign
- Utility Pole
- Illuminated Signs
- Guy Wire
- Light Pole
- AC Unit
- Spot Elevation +1165.07
- Traffic Light
- Existing Curb Elevations: TC=Top of Curb 1165.50 TC; FC=Bottom of Curb 1165.00 TC
- Traffic Flow Arrow
- Benchmark
- Turn Arrows
- Handicap Symbol
- Truncated Domes
- Shrub
- Trees
- Asphalt
- Right-of-Way R/W
- Terra Cotta T.C.
- Polyvinyl Chloride PVC
- High Density Polyethylene HDPE
- Concrete
- Finished Floor Elevation F.F.E.
- Gravel
- Corrugated Metal Pipe CMP
- Reinforced Concrete Pipe RCP
- Brick

SEAL

REV	DATE	DESCRIPTION	BY

PREPARED BY:
MDM
SURVEYORS & ENGINEERS, LLC
Surveyors • Engineers • Site Planners
3170 Ridge Pike, Suite 101
Warrendale, PA 15086
Ph: (724) 934-2810 Fax: (724) 934-2811
mdmcadd@mdmllc.com
www.mdmllc.com

CLIENT:
ALL WASHED UP AUTO SPA

PROJECT:
1380 & 1386 N. ATHERTON STREET
TOWNSHIP OF FERGUSON, COUNTY OF CENTRE
COMMONWEALTH OF PENNSYLVANIA

SHEET TITLE
TREE SURVEY PLAN

DRAWN BY: CWT
CHECKED BY: CMP
ISSUE DATE: 8-29-2022

SHEET NUMBER
TS-1

COPYRIGHT 2022 - MDM, LLC 9/28/2022 8:40am R:\All Behind Its Axis Sol\Sites Groups\WASUA Sites\TS-1 - Tree Survey Plan.dwg

SITE LOCATION MAP
SCALE: NOT TO SCALE

UTILITY CONTACTS

SANITARY SEWER
BOROUGH OF STATE COLLEGE
SEWER AUTHORITY
243 SOUTH ALLEN ST.
STATE COLLEGE, PA 16801
(814) 234-7140
AMY KERNER
akerner@statecollegepa.us

STORM SEWER
UNIVERSITY AREA JOINT AUTHORITY
1576 SPRING VALLEY RD
STATE COLLEGE, PA 16801
(814) 238-5361 EXT. 7715
MARK HARTER
mharter@uaja.com

STORM SEWER
FERGUSON TOWNSHIP PUBLIC WORKS
3147 RESEARCH DRIVE
STATE COLLEGE, PA 16801
(814) 238-4651
DAVID MODRICKER, P.E.

GAS SERVICE
COLUMBIA GAS, PA
1020 NORTH HARTLEY ST.
YORK, PA 17404
(717) 849-0160
NED LEPPO
nleppo@nisource.com

CABLE SERVICE
COMCAST BUSINESS SERVICES
NORTHEAST DIVISION HQ
676 ISLAND POND ROAD,
MANCHESTER, NH 03109
PETE FOURNIER
(603) 541-1099

TELEPHONE SERVICE
VERIZON, PA
250 SOUTH ALLEN ST.
(814) 231-6565
(877) 596-7577

WATER SERVICE
STATE COLLEGE BOROUGH
WATER AUTHORITY
1201 W BRANCH RD
STATE COLLEGE, PA 16801
(814) 238-6766

ELECTRIC SERVICE
WEST PENN POWER CO.
2800 EAST COLLEGE AVE.
STATE COLLEGE, PA 16801
(814) 231-5355

KEYNOTES

1. CLEAR AND GRUB SITE, AS REQUIRED, FOR NEW SITE IMPROVEMENTS. SEE E&S PLAN FOR LIMITS OF DISTURBANCE.
2. REMOVE EXISTING BUILDING, INCLUDING BASE, FOUNDATION, PORCHES, DECKS, ETC., AND PREP FOR NEW BUILDING/GRADING.
3. SAWCUT AND REMOVE EXISTING ASPHALT PAVEMENT, AND PREP FOR NEW PAVEMENT OR GRADING.
4. SAWCUT AND REMOVE EXISTING CONCRETE CURB.
5. SAWCUT AND REMOVE EXISTING CONCRETE SIDEWALK, RAMP AND CURB. PROTECT REMAINING EDGE DURING CONSTRUCTION.
6. REMOVE EXISTING RAILING.
7. REMOVE EXISTING LOT LIGHT, INCLUDING CONCRETE BASE, CONDUITS, WIRING, ETC.
8. REMOVE EXISTING ROAD IDENTIFICATION SIGN, INCLUDING BASE, CONDUITS, WIRING, ETC.
9. REMOVE EXISTING SIGN AND BASE.
10. REMOVE EXISTING SANITARY CLEANOUT AND PIPING, AND PREP FOR NEW SANITARY CONNECTION, AS REQUIRED. SEE SITE UTILITY PLAN. PLUG AND CAP SANITARY TAP AT MAIN NOT SCHEDULED FOR RE-USE, PER SANITARY AUTHORITY REQUIREMENTS.
11. REMOVE EXISTING GAS METER AND PORTION OF GAS LATERAL, AND PREP FOR NEW GAS METER CONNECTION TO EXISTING LATERAL. COORDINATE WITH GAS COMPANY. SEE SITE UTILITY PLAN.
12. REMOVE EXISTING ELECTRIC METER AND OVERHEAD UTILITY LINES. COORDINATE WITH UTILITY COMPANIES.
13. REMOVE EXISTING WATER LINE. CAP AND PLUG LINE AT WATER MAIN, PER WATER AUTHORITY REQUIREMENTS.
14. REMOVE EXISTING AC UNITS AND WIRING TO BUILDING.
15. REMOVE EXISTING WOOD TIES.
16. EXISTING CONCRETE SIDEWALK TO REMAIN. PROTECT DURING CONSTRUCTION. REPAIR/REPLACE ANY SECTIONS NOT IN GOOD CONDITION OR BETTER.
17. EXISTING CONCRETE CURB TO REMAIN. PROTECT DURING CONSTRUCTION.
18. REMOVE EXISTING WOOD FENCE, INCLUDING POSTS AND FOUNDATIONS.
19. EXISTING SANITARY MANHOLE AND 8"Ø T.C. PIPE TO REMAIN. PROTECT DURING CONSTRUCTION. CONFIRM LOCATION, DEPTH, SIZE, ETC., PRIOR TO ANY CONSTRUCTION ACTIVITIES, AND PREP FOR NEW SANITARY LATERAL CONNECTION. SEE SITE UTILITY PLAN.
20. EXISTING TREES TO REMAIN. PROTECT DURING CONSTRUCTION.
21. EXISTING UTILITY POLE AND OVERHEAD ELECTRIC/TELEPHONE/CABLE LINE TO REMAIN. PROTECT DURING CONSTRUCTION.
22. EXISTING ROAD IDENTIFICATION SIGN TO REMAIN. PROTECT DURING CONSTRUCTION.
23. EXISTING TREES TO BE REMOVED AND TEMPORARILY SEATED FOR FUTURE RELOCATION (TYP. FOR 2). SEE LANDSCAPE PLAN.
24. REMOVE EXISTING DEPRESSED CURB AND PREP FOR NEW FULL-DEPTH CONCRETE CURB. SEE SITE PLAN. PROTECT REMAINING EDGE OF ROADBED.
25. REMOVE EXISTING CURB AND PREP FOR NEW DEPRESSED CURB AT NEW DRIVEWAY. SEE SITE PLAN. PROTECT REMAINING EDGE OF ROADBED.
26. EXISTING DEPRESSED CURB TO REMAIN. PROTECT DURING CONSTRUCTION. REPAIR/REPLACE ANY FULL SECTIONS NOT IN GOOD CONDITION OR BETTER.
27. REMOVE EXISTING TREE, INCLUDING ROOT SYSTEM.

Dig Serial No.: 20212860668
Design Serial No.: 20212860672

CALL BEFORE YOU DIG !
PENNSYLVANIA LAW REQUIRES 3 WORKING DAYS NOTICE FOR CONSTRUCTION PHASE AND 10 WORKING DAYS IN DESIGN STAGE - STOP CALL
PENNSYLVANIA ONE CALL SYSTEM, INC.
1-800-242-1776

GRAPHIC SCALE
20 0 10 20 40 80
(IN FEET)
1 inch = 20 ft.

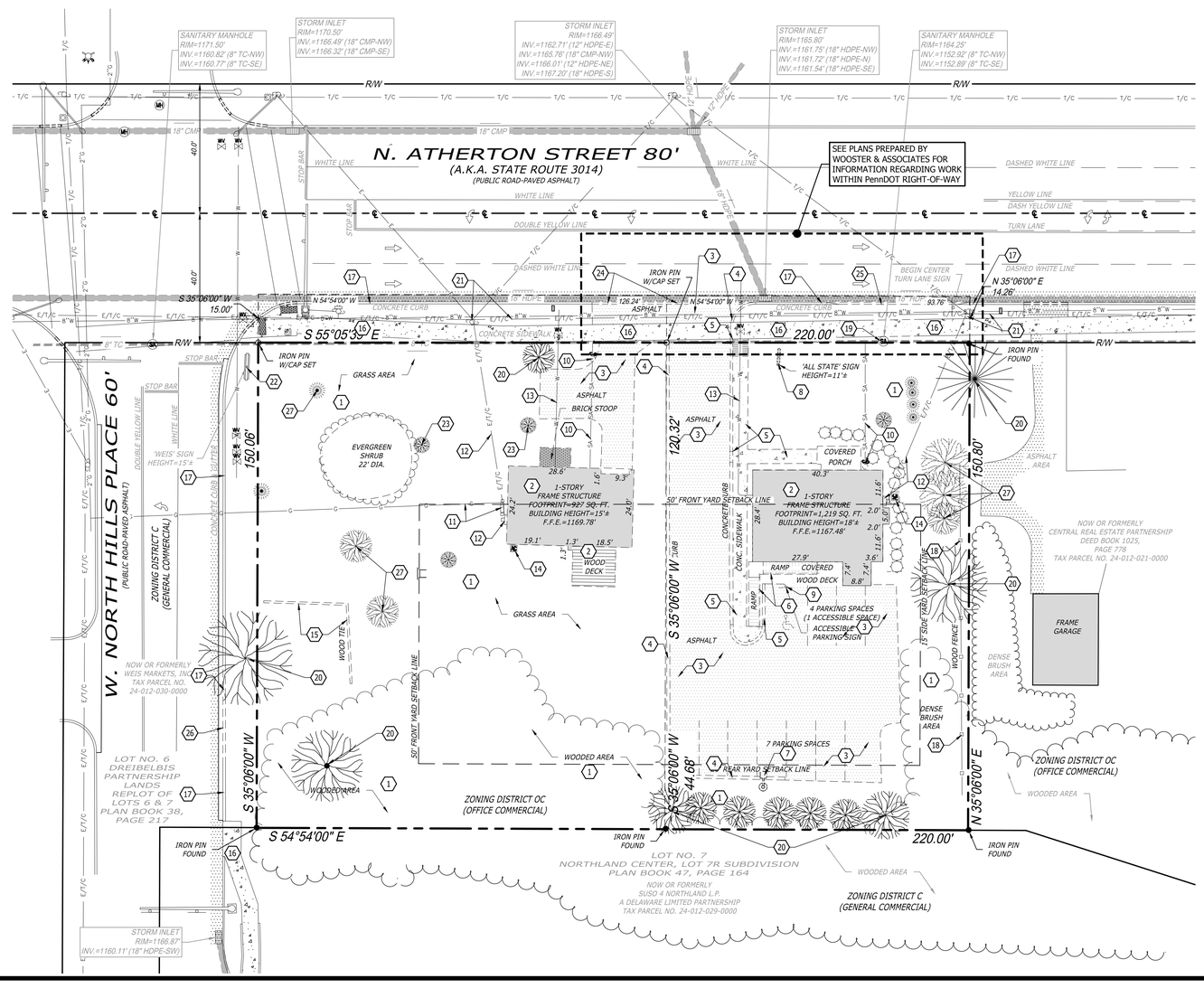

DEMOLITION NOTES

1. CONTRACTOR TO REVIEW PHASE II REPORT FOR SITE AND TO BE FAMILIAR WITH ANY AND ALL MATERIALS THAT MAY BE ENCOUNTERED OR OUTLINED IN PHASE II REPORT.
2. ALL WORK TO BE ACCOMPLISHED IN STRICT ACCORDANCE WITH ALL LOCAL ORDINANCES, CITY OR STATE.
3. WITHIN THE SUBJECT PROPERTY, THE INTENT IS TO HAVE A CLEAN, CLEAR SITE, FREE OF ALL EXISTING ITEMS NOTED TO BE REMOVED IN ORDER TO PERMIT THE CONSTRUCTION OF THE NEW PROJECT.
4. ALL ITEMS NOTED TO BE REMOVED BY THE SELLER SHALL BE ACCOMPLISHED PRIOR TO THE CLOSING OF THE REAL ESTATE TRANSACTION. ALL OTHER ITEMS NOTED TO BE REMOVED SHALL BE DONE SO AS PART OF THE CONTRACT FOR GENERAL CONSTRUCTION.
5. REMOVE ALL UTILITIES TO EXISTING STRUCTURES WHETHER SHOWN OR NOT. CUT AND CAP ALL UNDERGROUND LINES AT THE PROPERTY LINE UNLESS OTHERWISE NOTED.
6. FOR ALL ITEMS NOTED TO BE REMOVED - REMOVE NOT ONLY THE ABOVE GROUND ELEMENTS, BUT ALL UNDERGROUND ELEMENTS AS WELL, INCLUDING BUT NOT NECESSARILY LIMITED TO: FOUNDATIONS, GRAVEL FILLS, TREE ROOTS, OLD PIPE, ETC.
7. BACKFILL ALL EXCAVATIONS RESULTING FROM THE DEMOLITION WORK TO MEET THE REQUIREMENTS FOR FILL OUTLINED IN THE SOILS REPORT.
8. GENERAL CONTRACTOR IS RESPONSIBLE TO VERIFY, PRIOR TO THE FINAL CONTRACT EXECUTION, IF ANY BUILDING STRUCTURE THAT IS NOTED TO BE REMOVED HAS A BASEMENT. IF SO THE BUILDING STRUCTURE, BOTH FLOOR STRUCTURES, BASEMENT, FOUNDATION, ETC. ARE TO BE REMOVED AND BACKFILLED TO EXISTING GRADE ELEVATIONS SURROUNDING THE EXISTING STRUCTURE.
9. DEMOLITION SHOULD NOT BEGIN UNTIL E&S CONTROLS HAVE BEEN COMPLETED.
10. CONTRACTOR SHALL INSTALL 6' HIGH TEMPORARY CHAIN LINK FENCE AROUND PROPOSED WORK AREA, COMPLETE WITH VEHICLE GATE, MAN GATE, AND APPROPRIATE SIGNAGE AS REQUIRED BY LOCAL MUNICIPALITY. THE CONTRACTOR SHALL COORDINATE THE EXACT LOCATION OF THE TEMPORARY CONSTRUCTION FENCE IN THE FIELD WITH THE OWNER, THE LOCAL MUNICIPALITY AND COUNTY, AND CONSTRUCTION MANAGER.
11. THE CONTRACTOR SHALL BE RESPONSIBLE FOR THE MAINTENANCE AND PROTECTION OF TRAFFIC THROUGHOUT CONSTRUCTION AND SHALL INSTALL TRAFFIC CONTROL DEVICES, SIGNAGE, AND UTILIZE FLAGMEN AS NECESSARY. TRAFFIC CONTROL DEVICES SHALL BE IN ACCORDANCE WITH STATE AND LOCAL REQUIREMENTS.

LEGEND OF SYMBOLS

Water Line
Gas Line
Overhead Electric, Telephone & Cable Line
Overhead Telephone & Cable Line
Overhead Electric Line
Storm Sewer
Sanitary Sewer
Easements
Setback Line
Depressed Curb
Wooden/Vinyl Fence
Guard Rail
Tree Line
Signal Poles
Sign Poles
Street Light
Iron pin w/cap set (Unless otherwise noted)
Sanitary Manhole
Cleanout
Storm Manhole
Storm Inlet
Manhole
Traffic Signal Base
Sign
Illuminated Signs
Light Pole
Benchmark
Truncated Domes
Right-of-Way R/W
Shrub
Trees
Terra Cotta T.C.
Polyvinyl Chloride PVC
High Density Polyethylene HDPE
Finished Floor Elevation F.F.E.
Corrugated Metal Pipe CMP
Reinforced Concrete Pipe RCP
Iron Pin Found
Gas Meter
Gas Valve
Water Valve
Fire Hydrant
Electric Meter
Utility Pole
Guy Wire
AC Unit
Traffic Light
Traffic Flow Arrow
Turn Arrows
Handicap Symbol
Asphalt
Concrete
Gravel
Brick

SEAL
COMMONWEALTH OF PENNSYLVANIA
REGISTERED PROFESSIONAL
CHRISTOPHER M PETERS
ENGINEER
PE060187

REV	DATE	DESCRIPTION	BY

ALL WASHED UP AUTO SPA

PREPARED BY:
MDM
SURVEYORS & ENGINEERS, LLC
Surveyors • Engineers • Site Planners
37 Warrendale Drive
Warrendale, PA 15086
Ph: (724) 934-2810 Fax: (724) 934-2811
mdmcadd@mdmllc.com
www.mdmllc.com

CLIENT: ALL WASHED UP AUTO SPA

PROJECT: 1380 & 1386 N. ATHERTON STREET
TOWNSHIP OF FERGUSON, COUNTY OF CENTRE
COMMONWEALTH OF PENNSYLVANIA

SHEET TITLE
DEMOLITION PLAN

DRAWN BY: CWT
CHECKED BY: CMP
ISSUE DATE: 8-29-2022

SHEET NUMBER
SP-1

COPYRIGHT 2022 - MDM, LLC 9/29/2022 8:40am W:\All Behind Us Auto Spa\Store Group, WVG\Cad Docs\SP-1 - Demolition Plan.dwg

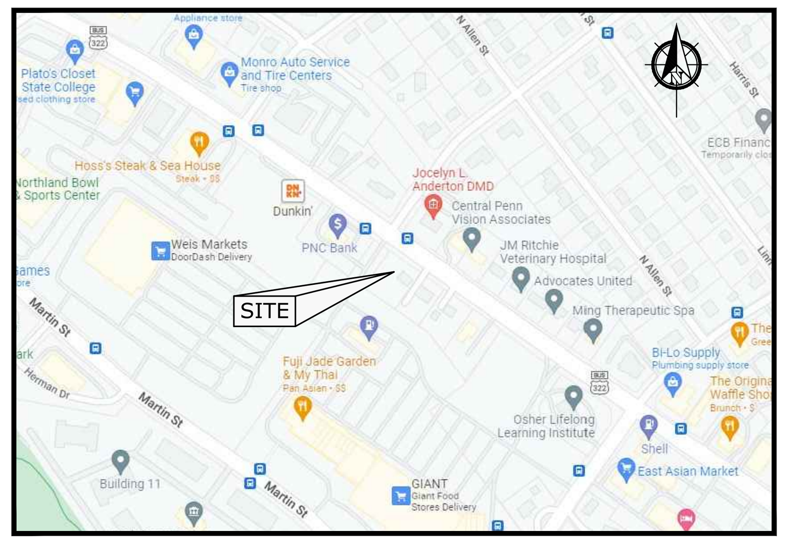

SITE LOCATION MAP

SCALE: 1" = 500'

GENERAL CONSTRUCTION NOTES

1. ALL CONSTRUCTION SHALL COMPLY WITH LOCAL MUNICIPALITY AND COUNTY CODES AND STANDARDS. ALL CONSTRUCTION SHALL BE PERFORMED IN ACCORDANCE WITH ALL APPLICABLE OSHA, FEDERAL, STATE AND LOCAL REGULATIONS.
2. THE CONTRACTOR SHALL OBTAIN ALL NECESSARY CONSTRUCTION PERMITS REQUIRED TO PERFORM ALL THE WORK. THE CONTRACTOR SHALL POST ALL BONDS, PROVIDE PROOF OF INSURANCE AND PROVIDE TRAFFIC CONTROL NECESSARY FOR THIS WORK.
3. THE CONTRACTOR SHALL VERIFY ALL SITE CONDITIONS IN THE FIELD AND CONTACT THE OWNER IF THERE ARE ANY QUESTIONS OR CONFLICTS REGARDING THE CONSTRUCTION DOCUMENTS AND/OR FIELD CONDITIONS SO THAT APPROPRIATE REVISIONS CAN BE MADE PRIOR TO CONSTRUCTION. ANY CONFLICT BETWEEN DRAWINGS AND THE SPECIFICATIONS SHALL BE CONFIRMED WITH THE CONSTRUCTION MANAGER PRIOR TO BIDDING.
4. SHOULD ANY UNCHARTED, OR INCORRECTLY CHARTED, EXISTING PIPING OR OTHER UTILITY BE UNCOVERED DURING EXCAVATION, CONSULT THE ENGINEER AND THE ARCHITECT IMMEDIATELY BEFORE PROCEEDING FURTHER WITH THE WORK IN THIS AREA.
5. DO NOT INTERRUPT EXISTING UTILITIES SERVICING FACILITIES OCCUPIED AND USED BY THE OWNER OR OTHERS DURING OCCUPIED HOURS EXCEPT WHEN SUCH INTERRUPTIONS HAVE BEEN AUTHORIZED IN WRITING BY THE OWNER, LOCAL MUNICIPALITY AND/OR UTILITY COMPANY. INTERRUPTIONS SHALL ONLY OCCUR AFTER ACCEPTABLE TEMPORARY OR PERMANENT SERVICE HAS BEEN PROVIDED.
6. THE CONTRACTOR SHALL ABIDE BY ALL OSHA, FEDERAL, STATE AND LOCAL REGULATIONS WHEN OPERATING CRANES, BOOMS, HOISTS, ETC. IN CLOSE PROXIMITY TO OVERHEAD ELECTRIC LINES. IF CONTRACTOR MUST OPERATE EQUIPMENT CLOSE TO ELECTRIC LINES, CONTACT THE POWER COMPANY TO MAKE ARRANGEMENTS FOR PROPER SAFEGUARDS.
7. THE CONTRACTOR SHALL RESTORE ANY STRUCTURES, PIPE, UTILITY, PAVEMENT, CURBS, SIDEWALKS, LANDSCAPED AREAS, ETC. WITHIN THE SITE OR ADJOINING PROPERTIES DISTURBED DURING DEMOLITION OR CONSTRUCTION TO THEIR ORIGINAL CONDITION OR BETTER, AND TO THE SATISFACTION OF THE OWNER AND LOCAL MUNICIPALITY. ALL COSTS TO COMPLETE THIS WORK SHALL BE INCLUDED IN THE BASE BID FOR THIS PROJECT.
8. THE CONTRACTOR SHALL BE RESPONSIBLE TO INSTALL AND MAINTAIN TRAFFIC DEVICES FOR PROTECTION OF PEDESTRIANS AND VEHICLES CONSISTING OF DRUMS, BARRIERS, SIGNS, LIGHTS, FENCES AND UNIFORM TRAFFIC CONTROLLERS IN ACCORDANCE WITH THE STATE DEPARTMENT OF TRANSPORTATION OR AS REQUIRED OR DIRECTED BY THE SITE ENGINEER OR CONSTRUCTION MANAGER OR LOCAL GOVERNING AUTHORITIES. CONTRACTOR SHALL MAINTAIN ALL TRAFFIC LANES AND PEDESTRIAN WALKWAYS AT ALL TIMES UNLESS WRITTEN APPROVAL FROM THE DEPARTMENT OF TRANSPORTATION, LOCAL MUNICIPALITY, COUNTY, OR OTHER GOVERNING AUTHORITY IS RECEIVED.
9. THE CONTRACTOR SHALL NOTIFY THE ENGINEER SHOULD ANY DISCREPANCY REGARDING THE PROPOSED WORK OR UNFORESEEN CONDITIONS ARISE PRIOR TO PROCEEDING FURTHER WITH THE AFFECTED WORK.
10. THE CONTRACTOR SHALL PROVIDE AS-BUILT RECORDS OF ALL CONSTRUCTION (INCLUDING UNDERGROUND UTILITIES) TO THE OWNER AND THE ARCHITECT FOLLOWING COMPLETION OF CONSTRUCTION ACTIVITIES.
11. REFER TO DETAIL SHEETS FOR EROSION AND SEDIMENT CONTROL, STORM DRAINAGE, UTILITY, PAVING, CURBING, SIGNAGE, AND RETAINING WALL DETAILS AS APPLICABLE.
12. PAVEMENT MARKINGS SHALL BE IN ACCORDANCE WITH DEPARTMENT OF TRANSPORTATION GUIDELINES AND SHALL BE EITHER COLD LAID THERMOPLASTIC TAPE OR PAINTED AS DESIGNATED ON THE PLANS OR PAVEMENT MARKING DETAILS.
13. SITE DIMENSIONS ARE REFERENCED TO THE FACE OF CURBS OR EDGE OF PAVING UNLESS OTHERWISE NOTED. ALL BUILDING DIMENSIONS ARE REFERENCED TO THE OUTSIDE FACE OF THE STRUCTURE UNLESS OTHERWISE NOTED.
14. ALL PAVING MATERIALS FURNISHED AND WORK COMPLETED SHALL BE IN STRICT ACCORDANCE WITH THE STATE DEPARTMENT OF TRANSPORTATION GUIDELINES UNLESS OTHERWISE SPECIFIED.
15. THE CONTRACTOR IS RESPONSIBLE FOR THE REMOVAL AND DISPOSAL OF ALL RUBBISH, TRASH, DEBRIS, AND ORGANIC MATERIAL IN A LAWFUL MANNER.
16. THE CONTRACTOR SHALL BE RESPONSIBLE FOR VERIFYING ALL DIMENSIONS FOR BUILDING, WALLS, CONCRETE SLABS, AND UTILITY SERVICE POINT CONNECTIONS AND NOTIFYING THE OWNER AND ENGINEER OF ANY CONFLICTS OR DISCREPANCIES PRIOR TO CONSTRUCTION. THE CONTRACTOR SHALL REFERENCE BUILDING CONSTRUCTION PLANS FOR EXACT LOCATIONS OF ALL UTILITY CONNECTIONS TO BUILDINGS AND DOOR STEP LOCATIONS.
17. PIPE BOLLARDS SHALL BE INSTALLED IN TRAFFIC AND LOADING AREAS AS REQUIRED TO PROTECT BUILDING CORNERS, RECEIVING AREAS, HYDRANTS, TRANSFORMERS, METERS, GENERATORS, COMPACTORS, STEPS, AND RAILINGS, AS NECESSARY.
18. THE OWNER, AT THEIR DISCRETION, RESERVES THE RIGHT TO MODIFY THE DETAILS AND STANDARDS OF CONSTRUCTION FOR ALL PRIVATE FACILITIES FROM THAT INDICATED ON THE APPROVED PLAN, PROVIDED THAT THE ALTERNATE STANDARD COMPLIES WITH LOCAL CODE AND/OR UTILITY COMPANY REQUIREMENTS AND THE GENERAL DESIGN INTENT OF THE PROJECT IS NOT COMPROMISED.
19. THE CONTRACTOR SHALL SUBMIT SHOP DRAWINGS OF ALL PRODUCTS, MATERIALS AND PLAN SPECIFICATIONS TO THE OWNER AS REQUIRED FOR REVIEW AND APPROVAL, PRIOR TO FABRICATION OR DELIVERY TO THE SITE. ALLOW A MINIMUM OF 14 WORKING DAYS FOR REVIEW.
20. THE CONTRACTOR SHALL REFERENCE ARCHITECTURAL PLANS FOR EXACT DIMENSIONS AND CONSTRUCTION DETAILS OF THE BUILDING, ROOF DRAINS, AND CONCRETE SIDEWALKS.
21. TRAFFIC CONTROL SIGNAGE SHALL CONFORM TO THE STATE DEPARTMENT OF TRANSPORTATION STANDARD DETAIL SHEETS AND THE MANUAL ON UNIFORM TRAFFIC CONTROL DEVICES. SIGNS SHALL BE INSTALLED PLUMB.
22. INFORMATION ON EXISTING UTILITIES HAS BEEN COMPILED FROM AVAILABLE INFORMATION INCLUDING UTILITY COMPANY AND MUNICIPAL RECORD MAPS AND FIELD SURVEY AND IS NOT GUARANTEED CORRECT OR COMPLETE. UTILITIES ARE SHOWN TO ALERT THE CONTRACTOR TO THEIR PRESENCE AND THE CONTRACTOR IS SOLELY RESPONSIBLE FOR DETERMINING ACTUAL LOCATIONS AND ELEVATIONS OF ALL UTILITIES INCLUDING SERVICES. PRIOR TO DEMOLITION OR CONSTRUCTION, THE CONTRACTOR SHALL CONTACT THE PA ONE CALL SYSTEM WITHIN THREE (3) WORKING DAYS BEFORE COMMENCEMENT OF WORK AT 1-800-242-1776 AND VERIFY ALL LOCATIONS.
23. NO PART OF THE LOT IS LOCATED WITHIN ANY FLOODPLAIN AREAS.
24. FIRE LANES SHALL BE ESTABLISHED AND PROPERLY DESIGNATED IN ACCORDANCE WITH THE LOCAL MUNICIPALITY AND LOCAL FIRE DEPARTMENT REQUIREMENTS.

ZONING INFORMATION

ZONING DISTRICT
ZONING DISTRICT: C
(COMMERCIAL)
A CAR WASH IS A PERMITTED USE WITHIN THIS ZONING DISTRICT.

ZONING INFORMATION WAS OBTAINED FROM:
FERGUSON TOWNSHIP PLANNING & ZONING
3147 RESEARCH DRIVE
STATE COLLEGE, PA 16801
(814) 238-4651
JENNA WARGO
DIRECTOR PLANNING & ZONING

ZONING	REQUIRED	PROPOSED
MIN. LOT AREA	5,000 SF	36,287 SF
MIN. LOT WIDTH	50'-0"	220.00'
MIN. FRONT YARD SETBACK (N. ATHERTON STREET) (W. NORTH HILLS PLACE)	50'-0"	75'-7" 57'-6"
MIN. SIDE YARD SETBACK	15'-0"	52'-9"
MIN. REAR YARD SETBACK	20'-0"	42'-0"
MIN. FRONT PARKING SETBACK	12'-0"	12'-0"
MAX. BUILDING HEIGHT	40'-0"	26'-3"
MAX. LOT COVERAGE	45%	9.8%
MAX. IMPERVIOUS COVERAGE	80%	59.4%
SIDE YARD BUFFER SETBACK	15'-0"	15'-0"
REAR YARD BUFFER SETBACK	15'-0"	15'-0"

PARKING REQUIREMENTS

ZONING DISTRICT: C
(COMMERCIAL)

FOUR (4) PARKING SPACES ARE REQUIRED FOR EMPLOYEES AND DELIVERIES.
NUMBER OF SPACES REQUIRED: 4 REQUIRED
NUMBER OF SPACES PROVIDED: 3 PROVIDED*

* TWO (2) DESIGNATED PARKING SPACES AND ONE (1) SPACE AT STRIPED AREA.

PARKING STALL SIZE: 9' x 18' REQUIRED
9' x 18' PROVIDED
PARKING STALL SIZE PROVIDED: NINETEEN (19) 11' x 18' @ VACUUM ISLANDS (INCLUDES ONE ACCESSIBLE PARKING STALL)

Dig Serial No.: 20212860668
Design Serial No.: 20212860672

CALL BEFORE YOU DIG !
PENNSYLVANIA LAW REQUIRES 3 WORKING DAYS NOTICE FOR CONSTRUCTION PHASE AND 10 WORKING DAYS IN DESIGN STAGE - STOP CALL
PENNSYLVANIA ONE CALL SYSTEM, INC.
1-800-242-1776

GRAPHIC SCALE
20 0 10 20 40 80
(IN FEET)
1 inch = 20 ft.

KEYNOTES

1. NEW FULL-DEPTH ASPHALT PAVEMENT. SEE DETAIL ON SHEET SP-5.
2. NEW FULL-DEPTH CONCRETE HEADER CURB. SEE DETAIL ON SHEET SP-5.
3. 6" THK. CONCRETE PAD OVER 6" THK. STONE SUB-BASE. SEE DETAIL ON SHEET SP-5. SEE ARCHITECTURAL PLANS FOR DIMENSIONS, TRENCH DRAINS, ETC.
4. 4" THK. CONCRETE SIDEWALK OVER 4" THK. STONE SUB-BASE WITH MONOLITHIC CURB ALONG EDGE OF PAVEMENT. SEE MONOLITHIC CONCRETE SIDEWALK DETAIL ON SHEET SP-5.
4A. 4" THK. CONCRETE SIDEWALK OVER 4" THK. STONE SUB-BASE. SEE CONCRETE SIDEWALK DETAIL ON SHEET SP-5.
5. 4" WIDE PAINTED LINE, WHITE.
6. PAINTED DIRECTIONAL ARROWS, WHITE.
7. 4" WIDE PAINTED DIAGONAL LINES, WHITE @ 2'-0" O.C.
8. MOVABLE ORANGE TRAFFIC CONES (TYP. FOR 3).
9. 6"φ BOLLARD. SEE DETAIL ON SHEET SP-5.
10. ACCESSIBLE PARKING SIGN MOUNTED ON GALVANIZED POST. SEE DETAIL ON SHEET SP-5.
11. ACCESSIBLE PARKING SYMBOL. SEE DETAIL ON SHEET SP-5.
12. NEW LOT LIGHT ON 3'-0" HIGH CONCRETE BASE. CONFIRM TYPE, HEIGHT, LOCATION, ETC., WITH OWNER PRIOR TO ANY CONSTRUCTION ACTIVITIES.
13. VACUUM ISLAND (TYP. FOR 21). SEE MANUFACTURER'S CUT SHEETS FOR INFORMATION RELATED TO CONCRETE ISLAND, POWER REQUIREMENTS, ETC.
14. PAY STATION (TYP. FOR 2). SEE MANUFACTURER'S CUT SHEETS FOR INFORMATION RELATED TO PAY STATION, CONCRETE ISLAND, POWER REQUIREMENTS, ETC.
15. AUTOMATIC GATE WITH VEHICLE LOOP DETECTOR. SEE MANUFACTURER'S CUT SHEETS FOR INFORMATION RELATED TO FOUNDATION, POWER REQUIREMENTS, ETC.
16. NEW ACCESSIBLE RAMP WITH MAXIMUM 8.33% RUNNING SLOPE AND MAXIMUM 2.0% CROSS-SLOPE. SEE DETAIL ON SHEET SP-5.
17. 6" THK. x 18" WIDE CONCRETE GUTTER AT PROPOSED VACUUM FOUNDATIONS, INSTALLED FLUSH TO ASPHALT PAVEMENT.
18. ROAD SIGN (UNDER SEPARATE PERMIT). CONFIRM LOCATION, SIZE, ETC., WITH OWNER, PRIOR TO ANY CONSTRUCTION ACTIVITIES.
19. NEW TRASH CORRAL. SEE DETAIL ON SHEET SP-5.
20. TAPER CURB FLUSH TO PAVEMENT.
21. LANDSCAPE AREA.
22. "ENTER" DIRECTIONAL SIGN (TYP. FOR 1).
23. "EXIT" DIRECTIONAL SIGN (TYP. FOR 1).
24. EXISTING CONCRETE DEPRESSED CURB WITH GUTTER PAN. REPAIR/REPLACE ANY FULL SECTIONS NOT IN GOOD CONDITION OR BETTER.
25. 8" THK. REINFORCED CONCRETE DRIVEWAY APPROACH OVER 6" THK. STONE SUB-BASE.
26. ALL WASHED UP PRODUCT DISPENSER. SEE MECHANICAL PLANS.
27. HOLD BACK OF CURB 5'-0" FROM FACE OF TREE TRUNK.
28. NEW CONCRETE RETAINING WALL w/3'-6" HIGH PEDESTRIAN SAFETY FENCE. SEE DETAIL ON SHEET SP-5. SEE GRADING PLAN FOR ELEVATIONS.

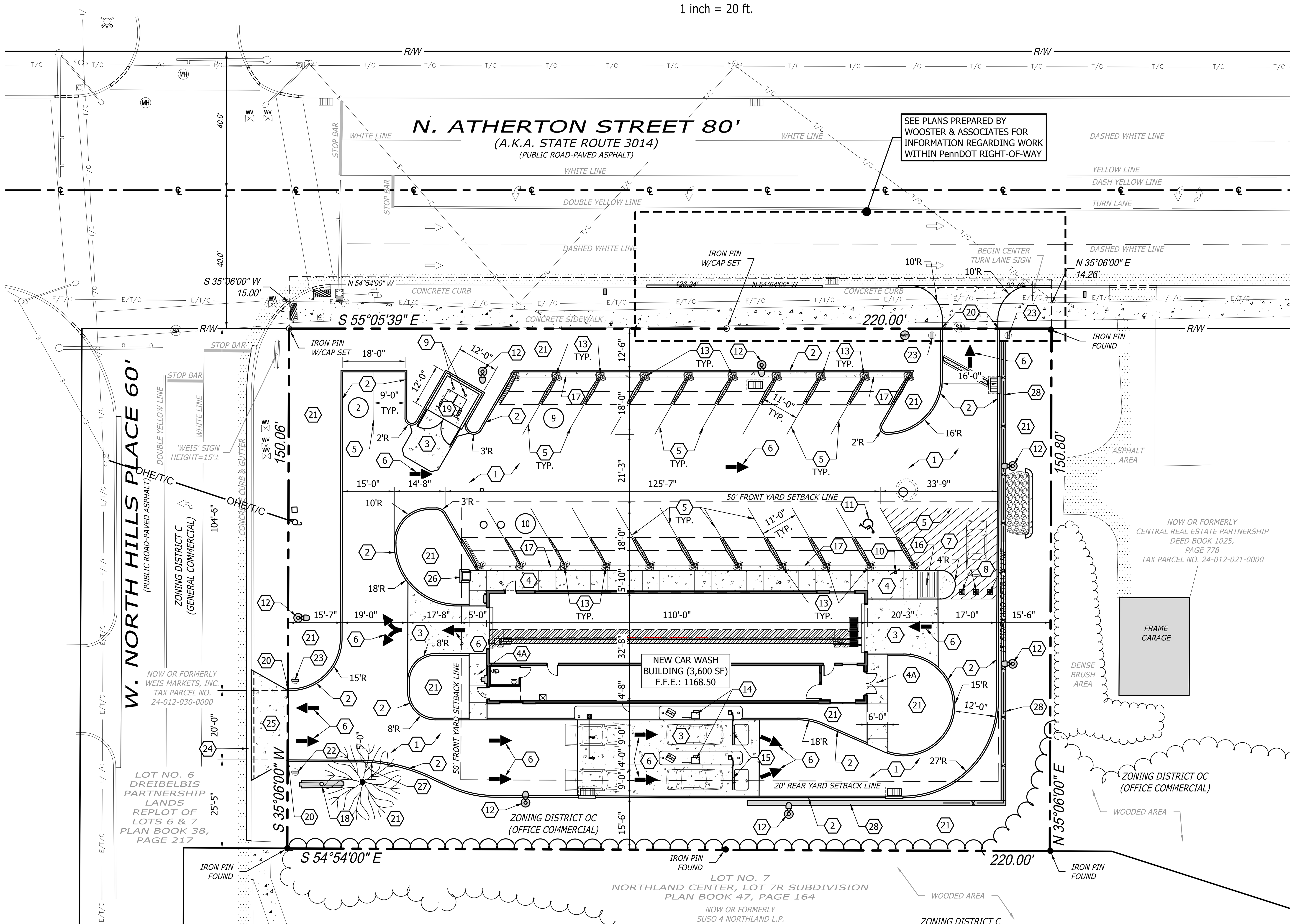

LEGEND OF SYMBOLS

Water Line
Gas Line
Overhead Electric, Telephone & Cable Line
Overhead Telephone & Cable Line
Overhead Electric Line
Storm Sewer
Sanitary Sewer
Easements
Setback Line
Depressed Curb
Wooden/Vinyl Fence
Guard Rail
Tree Line
Signal Poles
Sign Poles
Street Light
Iron pin w/cap set (Unless otherwise noted) — Iron Pin Found
Sanitary Manhole — Gas Meter
Cleanout — Gas Valve
Storm Manhole — Water Valve
Storm Inlet — Fire Hydrant
Manhole — Electric Meter
Traffic Signal Base — Utility Pole
Sign — Guy Wire
Illuminated Signs — AC Unit
Light Pole — Traffic Light
Benchmark — Traffic Flow Arrow
Truncated Domes — Turn Arrows
Right-of-Way R/W — Handicap Symbol
Shrub
Trees — Asphalt
Terra Cotta T.C.
Polyvinyl Chloride PVC — Concrete
High Density Polyethylene HDPE
Finished Floor Elevation F.F.E. — Gravel
Corrugated Metal Pipe CMP
Reinforced Concrete Pipe RCP — Brick

SEAL
COMMONWEALTH OF PENNSYLVANIA
REGISTERED PROFESSIONAL ENGINEER
CHRISTOPHER M PETERS
PE060187

REV	DATE	DESCRIPTION	BY

ALL WASHED UP! AUTO SPA

PREPARED BY:
MDM
SURVEYORS & ENGINEERS, LLC
Surveyors • Engineers • Site Planners
375 Northgate Drive
Warrendale, PA 15086
Ph: (724) 934-2810 Fax: (724) 934-2811
mdmcadd@mdmllc.com
www.mdmllc.com

CLIENT: ALL WASHED UP AUTO SPA

PROJECT: 1380 & 1386 N. ATHERTON STREET
TOWNSHIP OF FERGUSON, COUNTY OF CENTRE
COMMONWEALTH OF PENNSYLVANIA

SHEET TITLE
SITE PLAN

DRAWN BY: CWT
CHECKED BY: CMP
ISSUE DATE: 8-29-2022

SHEET NUMBER
SP-2

COPYRIGHT 2022 – MDM, LLC 9/06/2022 – 2:40pm W:\All Washed Up Auto Spa\State College, PA\Civil Docs\SP-2 – Site Plan.dwg

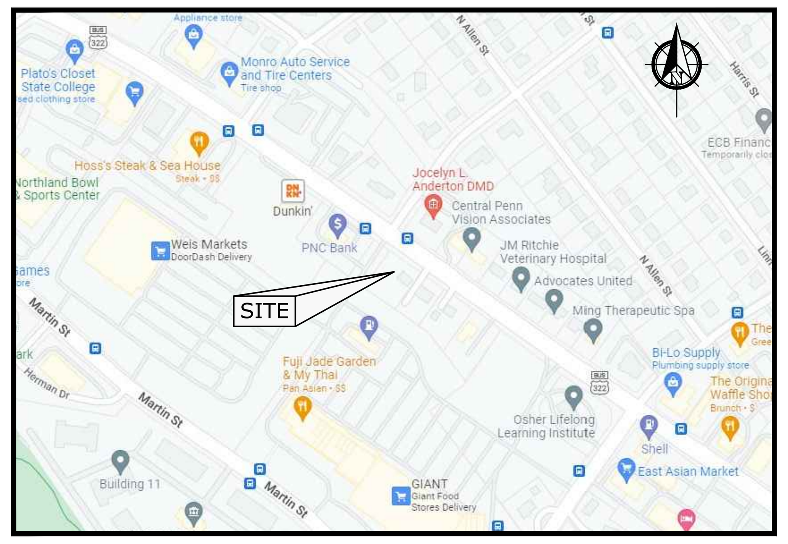

SITE LOCATION MAP

SCALE: 1" = 500'

Dig Serial No.: 20212860668
Design Serial No.: 20212860672

CALL BEFORE YOU DIG !

PENNSYLVANIA LAW REQUIRES 3 WORKING DAYS NOTICE FOR CONSTRUCTION PHASE AND 10 WORKING DAYS IN DESIGN STAGE - STOP CALL

PENNSYLVANIA ONE CALL SYSTEM, INC.

1-800-242-1776

GRAPHIC SCALE

20 0 10 20 40 80

(IN FEET)
1 inch = 20 ft.

EXISTING IMPERVIOUS AREA, ADJUSTED TO 80% PER ORDINANCE:	8,950± SF
PROPOSED IMPERVIOUS COVERAGE:	23,195 SF
CAPTURE VOLUME REQUIREMENTS:	
0.25" / SQUARE FOOT FACILITIES:	485 c.f. ±
REPLICATION OF EXISTING STONE SUMP:	975 c.f. ±
TOTAL CAPTURE VOLUME REQUIRED:	~1,460 c.f.
PROPOSED CAPTURE FACILITIES:	
75 c.f. CISTERN COLLECTING ROOF DRAINAGE FOR CAR WASH RECIRCULATION. 1,500 c.f. SUMP AT UNDERGROUND DETENTION SYSTEM.	
TOTAL CAPTURE PROPOSED:	1,575 c.f.

LEGEND OF SYMBOLS

Proposed Contour Line	1130
Proposed High Point	H.P.
Proposed Elevation	1129.50 TC / 1129.00 BC — Top of Curb / Bottom of Curb
	1128.62 TS / 1128.50 BS — Top Surface of Concrete / Asphalt Elevation at Edge of Concrete
Proposed Storm Inlet	
Proposed Storm Line	
Contour Line	1165
Water Line	W
Gas Line	G
Overhead Electric, Telephone & Cable Line	E/T/C
Overhead Telephone & Cable Line	T/C
Overhead Electric Line	E
Storm Sewer	
Sanitary Sewer	
Easements	
Setback Line	
Depressed Curb	
Wooden/Vinyl Fence	
Guard Rail	
Tree Line	
Signal Poles	
Sign Poles	
Street Light	

Iron pin w/cap set (Unless otherwise noted)		Iron Pin Found	
Sanitary Manhole	SA	Gas Meter	
Cleanout	CO	Gas Valve	GV
Storm Manhole	ST	Water Valve	WV
Storm Inlet		Fire Hydrant	
Manhole	MH	Electric Meter	
Traffic Signal Base		Utility Pole	
Sign		Guy Wire	
Illuminated Signs		AC Unit	AC
Light Pole		Traffic Light	
Benchmark		Traffic Flow Arrow	
Truncated Domes		Turn Arrows	
Right-of-Way	R/W	Handicap Symbol	
Shrub		Trees	
Spot Elevation	+1165.07	Asphalt	
Existing Curb Elevations: TC=Top of Curb, FC=Bottom of Curb	1165.50 TC / 1165.00 FC	Concrete	
Terra Cotta	T.C.	Gravel	
Polyvinyl Chloride	PVC	Brick	
High Density Polyethylene	HDPE		
Finished Floor Elevation	F.F.E.		
Corrugated Metal Pipe	CMP		
Reinforced Concrete Pipe	RCP		

GRADING & DRAINAGE NOTES

1. SEE SITE PLAN FOR ADDITIONAL GENERAL NOTES.
2. ALL SITE WORK, MATERIALS OF CONSTRUCTION, AND CONSTRUCTION METHODS SHALL COMPLY WITH LOCAL MUNICIPALITY, LOCAL COUNTY, AND DEPARTMENT OF TRANSPORTATION MATERIAL AND CONSTRUCTION SPECIFICATIONS.
3. THE CONTRACTOR IS SOLELY RESPONSIBLE FOR DETERMINING ACTUAL LOCATIONS AND ELEVATIONS OF ALL UTILITIES, INCLUDING SERVICES. PRIOR TO CONSTRUCTION, THE CONTRACTOR SHALL CONTACT THE PA ONE CALL SYSTEM AT 1-800-242-1776 AT LEAST THREE (3) WORKING DAYS BEFORE START OF WORK AND VERIFY ALL EXISTING UTILITY LOCATIONS.
4. ALL PIPES SHALL BE LAID ON STRAIGHT ALIGNMENTS AND EVEN GRADES USING A PIPE LASER OR OTHER ACCURATE METHOD.
5. THE CONTRACTOR SHALL COMPACT PIPE BACKFILL IN MAX. 8" LOOSE LIFTS TO 95% OF THE MAXIMUM DRY DENSITY PER ASTM D1557, ACCORDING TO THE PIPE BEDDING DETAILS. TRENCH BOTTOM SHALL BE STABLE IN HIGH GROUNDWATER AREAS. A PIPE FOUNDATION SHALL BE USED IN AREAS OF ROCK EXCAVATION.
6. CONTRACTOR SHALL PROVIDE ALL BENDS, FITTINGS, ADAPTERS, ETC., AS REQUIRED FOR PIPE CONNECTIONS TO BUILDING/CANOPY STUB-OUTS, INCLUDING ROOF/FOOTING DRAIN CONNECTIONS TO ROOF LEADERS AND TO STORM DRAINAGE SYSTEM.
7. TOPSOIL SHALL BE STRIPPED AND STOCKPILED FOR USE IN FINAL LANDSCAPING.
8. MANHOLE RIMS AND STORM INLET GRATES SHALL BE SET TO ELEVATIONS SHOWN. SET ALL EXISTING MANHOLE FRAMES AND COVERS, STORM INLET GRATES, VALVE BOXES, ETC., TO BE RAISED OR LOWERED, TO PROPOSED FINISHED GRADE, FLUSH WITH THE ADJACENT GRADE.
9. UNDERDRAINS MAY BE ADDED, IF DETERMINED NECESSARY BY THE ENGINEER OR CONSTRUCTION MANAGER, AFTER SUBGRADE IS ROUGH GRADED.
10. ALL EXISTING TOPOGRAPHICAL FEATURES (SPOT ELEVATIONS, CONTOURS, INVERTS, ETC.) CAN HAVE A TOLERANCE DIFFERENCE OF 6"± DEPENDING ON FIELD CONDITIONS AT THE TIME OF THE FIELD SURVEY. CONTRACTOR TO VERIFY ALL EXISTING TOPOGRAPHICAL FEATURES PRIOR TO CONSTRUCTION, AND ADVISE OWNER OF ANY DISCREPANCIES.
11. THE CONTRACTOR SHALL RESTORE ANY STRUCTURE, PIPE, UTILITY, PAVEMENT, CURBS, SIDEWALKS, LANDSCAPED AREAS, ETC. DISTURBED DURING CONSTRUCTION TO THE ORIGINAL CONDITION OR BETTER.
12. THE CONTRACTOR SHALL SUBMIT SHOP DRAWINGS OF MATERIALS AND STRUCTURES TO THE CONSTRUCTION MANAGER FOR REVIEW AND APPROVAL PRIOR TO FABRICATION.
13. THE CONTRACTOR SHALL PRESERVE EXISTING VEGETATION WHERE POSSIBLE AND/OR AS NOTED ON DRAWINGS. REFER TO EROSION AND SEDIMENTATION PLAN FOR LIMIT OF DISTURBANCE AND NOTES.
14. THE CONTRACTOR SHALL COMPACT FILL IN 8" MAXIMUM LIFTS UNDER ALL PARKING, BUILDING, AND DRIVE AREAS TO 95% OF THE MAXIMUM DRY DENSITY AS DETERMINED BY ASTM D1557 (MODIFIED PROCTOR TEST), OR AS DIRECTED BY THE GEOTECHNICAL ENGINEER.
15. THE CONTRACTOR IS RESPONSIBLE FOR THE REMOVAL AND DISPOSAL OF ALL RUBBISH, TRASH, DEBRIS, AND ORGANIC MATERIAL IN A LAWFUL MANNER.
16. THE CONTRACTOR SHALL BE ADVISED THAT ALL EXCAVATION IS CONSIDERED UNCLASSIFIED AND THAT IT SHALL BE RESPONSIBLE FOR ALL MEANS, METHODS, AND MATERIALS OF CONSTRUCTION TO COMPLETE CONSTRUCTION AS DESIGNED. ADDITIONALLY, THE CONTRACTOR SHALL BE RESPONSIBLE FOR THE OFF-SITE DISPOSAL OF ANY AND ALL EXCESS OR UNSUITABLE MATERIAL UNABLE TO BE PLACED ON SITE AND THE IMPORTATION OF ANY BORROW MATERIAL NECESSARY TO COMPLETE THE JOB.
17. ALL EXCAVATION AND GRADING CONSTRUCTION SHALL BE PERFORMED IN ACCORDANCE WITH THE GEOTECHNICAL ENGINEERING REPORT.
18. SITE GRADING SHALL BE PERFORMED TO PROVIDE POSITIVE DRAINAGE TO STORM INLETS AND TO PRECLUDE THE PONDING OF WATER ON SITE.
19. VERIFY REQUIRED SPOT ELEVATIONS/GRADING IN THE VICINITY OF THE BUILDINGS WITH THE ARCHITECTURAL PLANS.
20. ALL ACCESSIBLE PARKING SPACES TO HAVE A MAXIMUM SLOPE OF 2% IN ANY DIRECTION.
21. ALL SIDEWALKS AND ACCESSIBLE ROUTES TO THE BUILDING ARE TO HAVE A MAXIMUM CROSS SLOPE OF 2%, AND A MAXIMUM LONGITUDINAL SLOPE OF 5%.
22. CONTRACTOR TO FIELD VERIFY PROPOSED AND EXISTING GRADES, SLOPES, ETC., FOR PROPOSED ACCESSIBLE PARKING AREAS, RAMPS, ETC., WITH ARCHITECT, PRIOR TO CONSTRUCTION.
23. LOCATIONS OF EXISTING UNDERGROUND UTILITIES ARE TAKEN FROM FIELD OBSERVATION, UTILITY MAPS, ETC., AND ARE NOT ASSUMED TO BE ACCURATE. PRIOR TO ANY CONSTRUCTION ACTIVITIES, CONTRACTOR TO DIG TEST PITS AT ALL PROPOSED UTILITY CROSSINGS, TO VERIFY LOCATION, DEPTH, SIZE, ETC. OF EXISTING UNDERGROUND UTILITIES, AND CONFIRM NEW UTILITY LINES CAN BE INSTALLED AS PROPOSED. ADVISE CONSTRUCTION MANAGER IMMEDIATELY OF ANY CONFLICTS OR DISCREPANCIES.

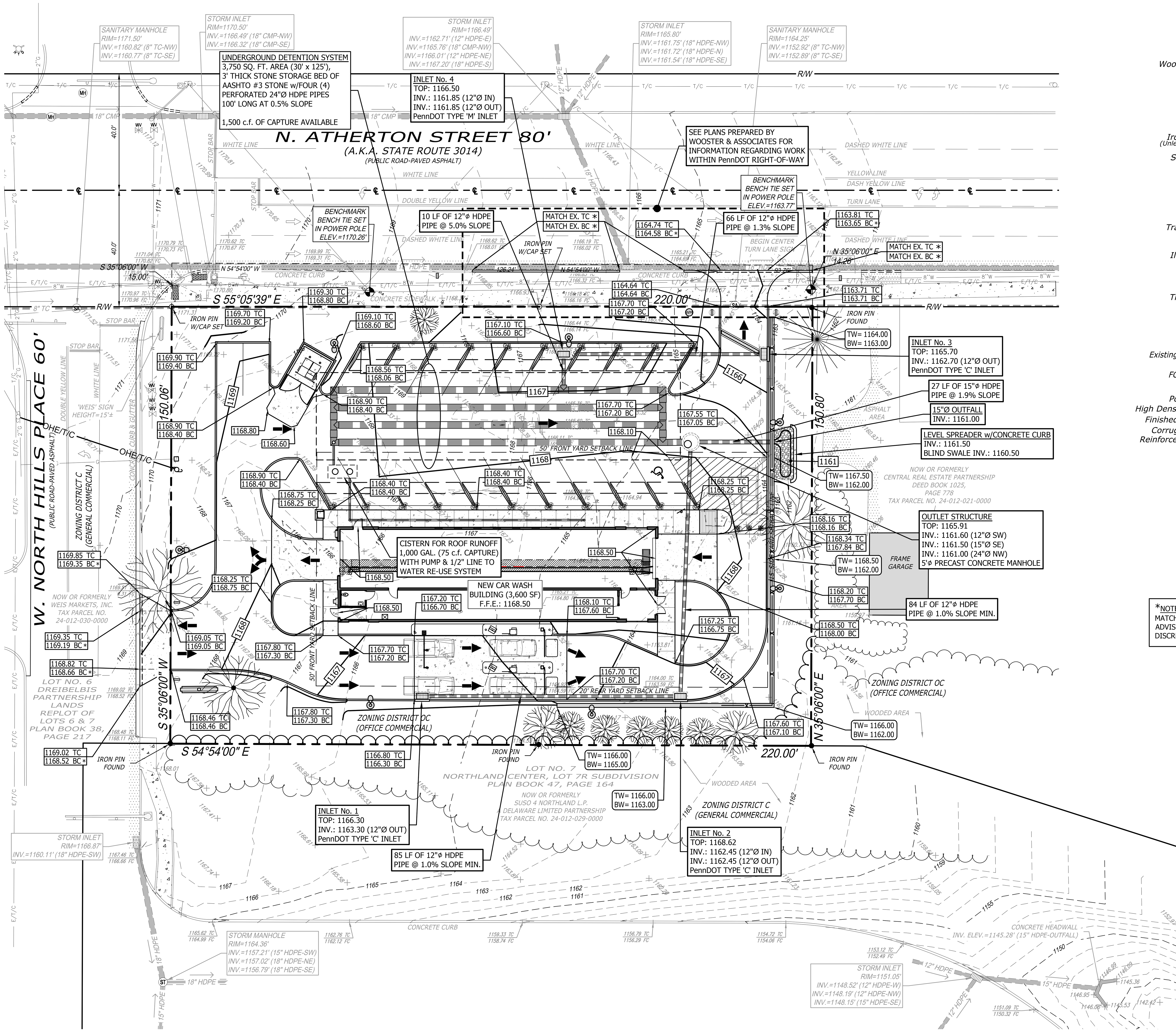

*NOTE:
MATCH EXISTING GRADES AT PAVEMENT. ADVISE CONSTRUCTION MANAGER OF ANY DISCREPANCIES PRIOR TO CONSTRUCTION.

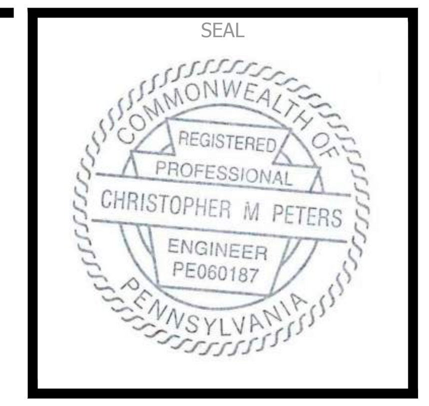

REV	DATE	DESCRIPTION	BY

ALL WASHED UP! AUTO SPA

PREPARED BY:
MDM
SURVEYORS & ENGINEERS, LLC
Surveyors • Engineers • Site Planners
375 Northgate Drive
Warrendale, PA 15086
Ph: (724) 934-2810 Fax: (724) 934-2811
mdmcadd@mdmllc.com
www.mdmllc.com

CLIENT: ALL WASHED UP AUTO SPA

PROJECT: 1380 & 1386 N. ATHERTON STREET
TOWNSHIP OF FERGUSON, COUNTY OF CENTRE
COMMONWEALTH OF PENNSYLVANIA

SHEET TITLE
CONCEPT STORMWATER PLAN

DRAWN BY: CWT
CHECKED BY: CMP
ISSUE DATE: 8-29-2022

SHEET NUMBER
SP-3

COPYRIGHT 2022 - MDM, LLC 9/06/2022 - 2:42pm W:\All Washed Up Auto Spa\State College, PA\Civil Docs\SP-3 SP-4 - Xref.dwg

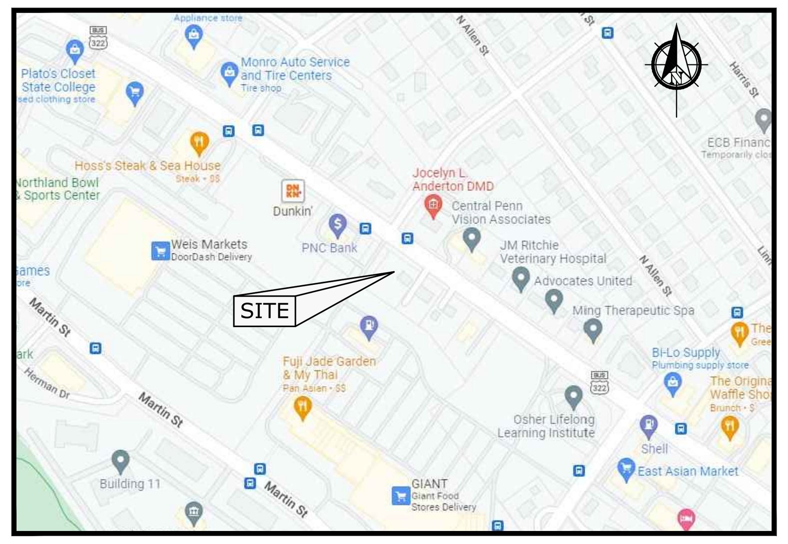

SITE LOCATION MAP
SCALE: 1" = 500'

UTILITY CONTACTS

Electric Service
West Penn Power Co.
2800 East College Avenue
State College, PA 16801
814-231-5355
W.O. #

Storm Sewer
Ferguson Township Public Works
3147 Research Drive
State College, PA 16801
814-238-4651
David Modricker, P.E.

Water Service
State College Borough Water Authority
1201 West Branch Road
State College, PA 16801
814-238-6766

Gas Service
Columbia Gas, PA
1020 North Hartley Street
York, PA 17404
717-849-0160
Ned Leppo
nleppo@nisource.com

Storm Sewer
University Area Joint Authority
1576 Spring Valley Road
State College, PA 16801
814-238-5361 ext. 7715
Mark Harter
mharter@uaja.com

Sanitary Sewer
Borough of State College Sewer Authority
243 South Allen Street
State College, PA 16801
814-234-7140
Amy Kerner
akerner@statecollegepa.us

Telephone Service
Verizon, PA
250 South Allen Street
814-231-6565
877-596-7577

Dig Serial No.: 20212860668
Design Serial No.: 20212860672

CALL BEFORE YOU DIG !
PENNSYLVANIA LAW REQUIRES 3 WORKING DAYS NOTICE FOR CONSTRUCTION PHASE AND 10 WORKING DAYS IN DESIGN STAGE - STOP CALL
PENNSYLVANIA ONE CALL SYSTEM, INC.
1-800-242-1776

UTILITY SERVICE INFORMATION

(A) SANITARY SERVICE
NEW 6"ø SDR 35 SANITARY MAIN FROM BUILDING TO SANITARY MAIN AT 1.0% SLOPE MIN.

(B) WATER SERVICE
INSTALL NEW 2"ø PVC WATER LINE FROM MAIN TO BUILDING, IN ACCORDANCE WITH WATER AUTHORITY REQUIREMENTS.

(C) GAS SERVICE
EXISTING GAS LATERAL SERVICE LINE. CONFIRM WITH GAS COMPANY.

(C1) GAS SERVICE
CONTRACTOR TO INSTALL NEW GAS LINE FROM NEW CURB BOX TO METER, PER GAS COMPANY REQUIREMENTS.

(D) ELECTRIC SERVICE
CONTRACTOR TO FURNISH & INSTALL NEW SECONDARY SERVICE FROM NEW UTILITY POLE TO METER SET, PER POWER COMPANY REQUIREMENTS.

(E) TELEPHONE SERVICE
CONTRACTOR TO FURNISH & INSTALL NEW CONDUIT WITH PULL ROPE FROM NEW UTILITY POLE TO BUILDING. COORDINATE WITH TELEPHONE COMPANY FOR INSTALLATION OF NEW TELEPHONE WIRES.

(F) CABLE SERVICE
CONTRACTOR TO FURNISH & INSTALL NEW CONDUIT WITH PULL ROPE FROM NEW UTILITY POLE TO PROPOSED BUILDING. COORDINATE WITH CABLE COMPANY FOR INSTALLATION OF NEW CABLE LINES.

UTILITY KEYNOTES

1. NEW CURB BOX FOR GAS SERVICE BY CONTRACTOR.
2. PROPOSED GAS METER. CONFIRM LOCATION WITH GAS COMPANY.
3. NEW UTILITY POLE WITH POLE-MOUNTED TRANSFORMER, BY POWER COMPANY.
4. PROPOSED ELECTRIC METER.
5. 1,000 GALLON OIL/WATER SEPARATOR MEETING TOWNSHIP AND SANITARY AUTHORITY REQUIREMENTS. COORDINATE BUILDING CONNECTION, LOCATION AND INVERTS WITH ARCHITECTURAL PLANS. DESIGN OF THE PROPOSED OIL/WATER SEPARATOR SHALL BE SUBMITTED TO OWNER FOR APPROVAL, PRIOR TO PURCHASE AND INSTALLATION.
6. NEW WATER METER VAULT, PER WATER AUTHORITY REQUIREMENTS.
7. WATER RECLAMATION SYSTEM. CONTRACTOR SHALL COORDINATE INSTALLATION REQUIREMENTS WITH OWNER AND EQUIPMENT SUPPLIER. VERIFY LOCATION, SIZE, CONNECTION POINTS, ETC., WITH OWNER AND EQUIPMENT SUPPLIER, PRIOR TO ANY CONSTRUCTION ACTIVITIES.
8. 6"ø SDR 35 STORM LINE @ 1.0% SLOPE MIN. CONNECT TO PROPOSED BUILDING DOWNSPOUTS AND TIE TO PROPOSED CISTERN.
9. NEW SANITARY CLEANOUT/FRESH AIR VENT. SEE PLUMBING PLANS.
10. 6"ø STORM CLEANOUT. SEE DETAIL ON SHEET PCSM2.
11. ELECTRIC SERVICE FOR NEW ROAD SIGN. PROVIDE TRENCHING, BACKFILL, CONDUIT AND WIRE, PER ELECTRIC REQUIREMENTS.
12. CONDUIT AND WIRE FOR NEW ENTRANCE/EXIT SIGNS. CONFIRM WITH OWNER.
13. CONDUIT AND WIRE FOR NEW LOT LIGHTS, PER MANUFACTURER'S REQUIREMENTS.
14. FURNISH AND INSTALL 1"ø CONDUIT w/PULL WIRE FROM PROPOSED LOT LIGHTS/PAY STATIONS, FOR DATA CABLE AND CAMERA LINES. CONFIRM WITH OWNER, PRIOR TO CONSTRUCTION.
15. SEE MANUFACTURER'S SPECIFICATIONS FOR INFORMATION REGARDING POWER REQUIREMENTS.
16. NEW OVERHEAD UTILITY SERVICE LINES. COORDINATE WITH UTILITY COMPANIES.

GENERAL UTILITY NOTES

1. CONTRACTOR SHALL CONTACT RESPECTIVE UTILITY COMPANIES PRIOR TO THE COMMENCEMENT OF ANY CONSTRUCTION ACTIVITIES, TO COORDINATE REQUIREMENTS TO ENSURE TIMELY SERVICE INSTALLATION.
2. PROPER COORDINATION WITH THE RESPECTIVE UTILITY COMPANIES SHALL BE PERFORMED BY THE CONTRACTOR TO INSURE THAT ALL UTILITY COMPANY, LOCAL MUNICIPALITY, AND LOCAL COUNTY STANDARDS FOR MATERIALS AND CONSTRUCTION METHODS ARE MET.
3. THE CONTRACTOR SHALL VISIT THE SITE AND VERIFY THE ELEVATION AND LOCATION OF ALL UTILITIES BY VARIOUS MEANS PRIOR TO BEGINNING ANY EXCAVATION. TEST PITS SHALL BE DUG AT ALL LOCATIONS WHERE SEWERS CROSS EXISTING UTILITIES, AND THE HORIZONTAL AND VERTICAL LOCATIONS OF THE UTILITIES SHALL BE DETERMINED. THE CONTRACTOR SHALL CONTACT THE OWNER IN THE EVENT OF ANY UNFORESEEN CONFLICTS BETWEEN EXISTING AND PROPOSED UTILITIES SO THAT AN APPROPRIATE MODIFICATION MAY BE MADE.
4. THE CONTRACTOR SHALL ARRANGE FOR AND COORDINATE WITH THE RESPECTIVE UTILITY COMPANIES FOR SERVICE INSTALLATIONS AND CONNECTIONS AND MAIN AND SERVICE RELOCATIONS. THE CONTRACTOR SHALL COORDINATE THE WORK TO BE PERFORMED BY THE VARIOUS UTILITY COMPANIES AND SHALL SECURE ALL PERMITS AND PAY ALL FEES FOR CONNECTIONS, DISCONNECTIONS, RELOCATIONS, INSPECTIONS, AND DEMOLITION, AS NECESSARY.
5. THE CONTRACTOR SHALL MAINTAIN ALL FLOWS AND UTILITY CONNECTIONS TO EXISTING BUILDINGS, ETC. WITHOUT INTERRUPTION UNLESS/UNTIL AUTHORIZED TO DISCONNECT BY THE OWNER, UTILITY COMPANIES, AND GOVERNING AUTHORITIES. THE CONTRACTOR SHALL INSTALL AS NECESSARY, TEMPORARY SITE LIGHTING, GAS, SANITARY, WATER, STORM, ELECTRIC, TELEPHONE, AND CABLE SERVICES TO SERVICE BUILDING(S) TO REMAIN OPEN.
6. ALL EXISTING PAVEMENT WHERE UTILITY PIPING IS TO BE INSTALLED SHALL BE SAW CUT AND REPLACED IN ACCORDANCE WITH THE PAVEMENT REPAIR REQUIREMENTS OF LOCAL MUNICIPALITY AND THE DETAILS CONTAINED HEREIN.
7. ALL WATER MAINS, WATER SERVICES AND SANITARY SEWER LATERALS SHALL CONFORM TO THE DEPARTMENT OF ENVIRONMENTAL PROTECTION, APPLICABLE COUNTY AND LOCAL DEPARTMENTS, AND APPROPRIATE UTILITY COMPANY SPECIFICATIONS.
8. ALL PIPES SHALL BE LAID ON STRAIGHT ALIGNMENTS AND EVEN GRADES USING A PIPE LASER OR OTHER ACCURATE METHOD.
9. TEST PITS SHALL BE SHOWN AT ALL UTILITY CROSSINGS AND AT THE POINTS OF CONNECTION TO EXISTING WATER MAINS. AT LEAST 10 DAYS PRIOR TO CONSTRUCTION ACTIVITY THE CONTRACTOR MUST OBTAIN THE TEST PIT DATA AND COORDINATE WITH THE INSPECTOR. IF THE TEST RESULTS SHOW A POTENTIAL CONFLICT OR NON-COMPLIANCE WITH THE APPROVED PLAN, REVISIONS TO THE PLANS MUST BE SUBMITTED FOR APPROVAL. IN SUCH INSTANCES, NO WORK SHALL COMMENCE UNTIL CONFLICTS ARE RESOLVED AND REVISIONS APPROVED.
10. RELOCATION OF ANY UTILITY COMPANY FACILITIES TO BE DONE IN ACCORDANCE WITH THE REQUIREMENTS OF THE UTILITY COMPANY AND LOCAL MUNICIPALITY.
11. THE CONTRACTOR SHALL COMPACT PIPE BACKFILL IN MAX. 8" LOOSE LIFTS TO 95% OF THE MAXIMUM DRY DENSITY PER ASTM D1557, ACCORDING TO THE PIPE BEDDING DETAILS. TRENCH BOTTOM SHALL BE STABLE IN HIGH GROUNDWATER AREAS. A PIPE FOUNDATION SHALL BE USED IN AREAS OF ROCK EXCAVATION.
12. CONTRACTOR TO PROVIDE SLEEVES UNDER FOOTINGS OR THROUGH FOUNDATIONS FOR UTILITY CONNECTIONS.
13. CONTRACTOR SHALL PROVIDE ALL BENDS, FITTINGS, ADAPTERS, ETC. AS REQUIRED FOR PIPE CONNECTIONS TO BUILDING/CANOPY STUB-OUTS, INCLUDING ROOF/FOOTING DRAIN CONNECTIONS TO ROOF LEADERS AND TO STORM DRAINAGE SYSTEM.
14. UTILITY CONDUIT PIPE SHALL BE SCHEDULE 80 PVC AND/OR AS REQUIRED BY THE LOCAL UTILITY COMPANY. SERVICES MAY BE INSTALLED IN A COMMON TRENCH WITH 12" CLEAR SPACE BETWEEN SERVICES. MINIMUM COVER SHALL BE 36" ON ELECTRIC CONDUITS AND 24" ON TELEPHONE AND CABLE CONDUITS. SERVICES SHALL BE MARKED WITH MAGNETIC LOCATOR TAPE. GALVANIZED STEEL ELECTRICAL CONDUIT SHALL BE USED AT POLE AND TRANSFORMER LOCATIONS. INSTALL HAND HOLES AS REQUIRED.
15. ALL UTILITY CONSTRUCTION IS SUBJECT TO INSPECTION PRIOR TO APPROVAL FOR BACKFILL, IN ACCORDANCE WITH THE APPROPRIATE UTILITY COMPANY, LOCAL MUNICIPALITY, AND/OR LOCAL COUNTY REQUIREMENTS.
16. MANHOLE RIMS AND STORM INLETS SHALL BE SET TO ELEVATIONS SHOWN. ADJUST ALL EXISTING MANHOLE FRAMES AND COVERS, STORM INLET GRATES, VALVE BOXES, ETC., TO BE RAISED OR LOWERED, TO PROPOSED FINISHED GRADE, FLUSH WITH THE ADJACENT GRADE.
17. THE CONTRACTOR SHALL RESTORE ANY STRUCTURE, PIPE, UTILITY, PAVEMENT, CURBS, SIDEWALKS, LANDSCAPED AREAS, ETC. DISTURBED DURING CONSTRUCTION TO THE ORIGINAL CONDITION OR BETTER.
18. UNLESS OTHERWISE INDICATED ON THE DRAWINGS, ALL SANITARY SEWER PIPING SHALL BE POLYVINYL CHLORIDE (PVC) PIPE AND FITTINGS ASTM D3034, TYPE PSM WITH A MAXIMUM SDR OF 35, WITH FLEXIBLE ELASTOMERIC SEAL JOINTS, ASTM D3212.
19. ALL SANITARY SEWER PIPING SHALL HAVE A MINIMUM OF 6" OF COARSE AGGREGATE BEDDING.
20. THE CONTRACTOR SHALL CONTACT THE LOCAL COUNTY HEALTH DEPARTMENT AND FILE AND OBTAIN A PLUMBING PERMIT FOR THE WORK INDICATED HEREON AND COMPLIANCE WITH THE LOCAL COUNTY PLUMBING CODE.
21. OBTAIN REQUIRED SANITARY SEWER CONNECTION PERMIT AND PAY ALL CONNECTION AND TAPPING FEES BEFORE CONNECTING ANY NEW SEWER LINE TO THE AUTHORITY'S SEWER LINES (FEES TO BE PAID BY OWNER).
22. WATER LINE AFTER WATER METER SHALL BE ENCASED IN 4" SCH. 40 PVC CONDUIT UNDER ALL CONCRETE OR ASPHALT SURFACES AND TO 1" ABOVE FINISHED FLOOR.
23. THE CONTRACTOR SHALL BE ADVISED THAT ALL EXCAVATION IS CONSIDERED UNCLASSIFIED AND THAT IT SHALL BE RESPONSIBLE FOR ALL MEANS, METHODS, AND MATERIALS OF CONSTRUCTION TO COMPLETE CONSTRUCTION AS DESIGNED. ADDITIONALLY, THE CONTRACTOR SHALL BE RESPONSIBLE FOR THE OFF-SITE DISPOSAL OF ANY AND ALL EXCESS OR UNSUITABLE MATERIAL UNABLE TO BE PLACED ON SITE AND THE IMPORTATION OF ANY BORROW MATERIAL NECESSARY TO COMPLETE THE JOB.
24. COORDINATE INSTALLATION OF LOT LIGHTS, TREES, SIGNS, ETC., WITH PROPOSED UNDERGROUND UTILITIES. CONTACT OWNER OF ANY DISCREPANCIES PRIOR TO CONSTRUCTION.
25. OIL/WATER SEPARATOR, AS MANUFACTURED BY ZURN INDUSTRIES OR EQUAL. CONFIRM SIZE, DEPTH, ETC., WITH MANUFACTURER PRIOR TO CONSTRUCTION. CONTRACTOR TO SUBMIT SHOP DRAWINGS FOR APPROVAL TO OWNER.

COPYRIGHT 2022 - MDM, LLC 9/06/2022 - 2:41pm W:\All Washed Up Auto Spa\State College, PA\Civil Docs\SP-3 SP-4 - Xref.dwg

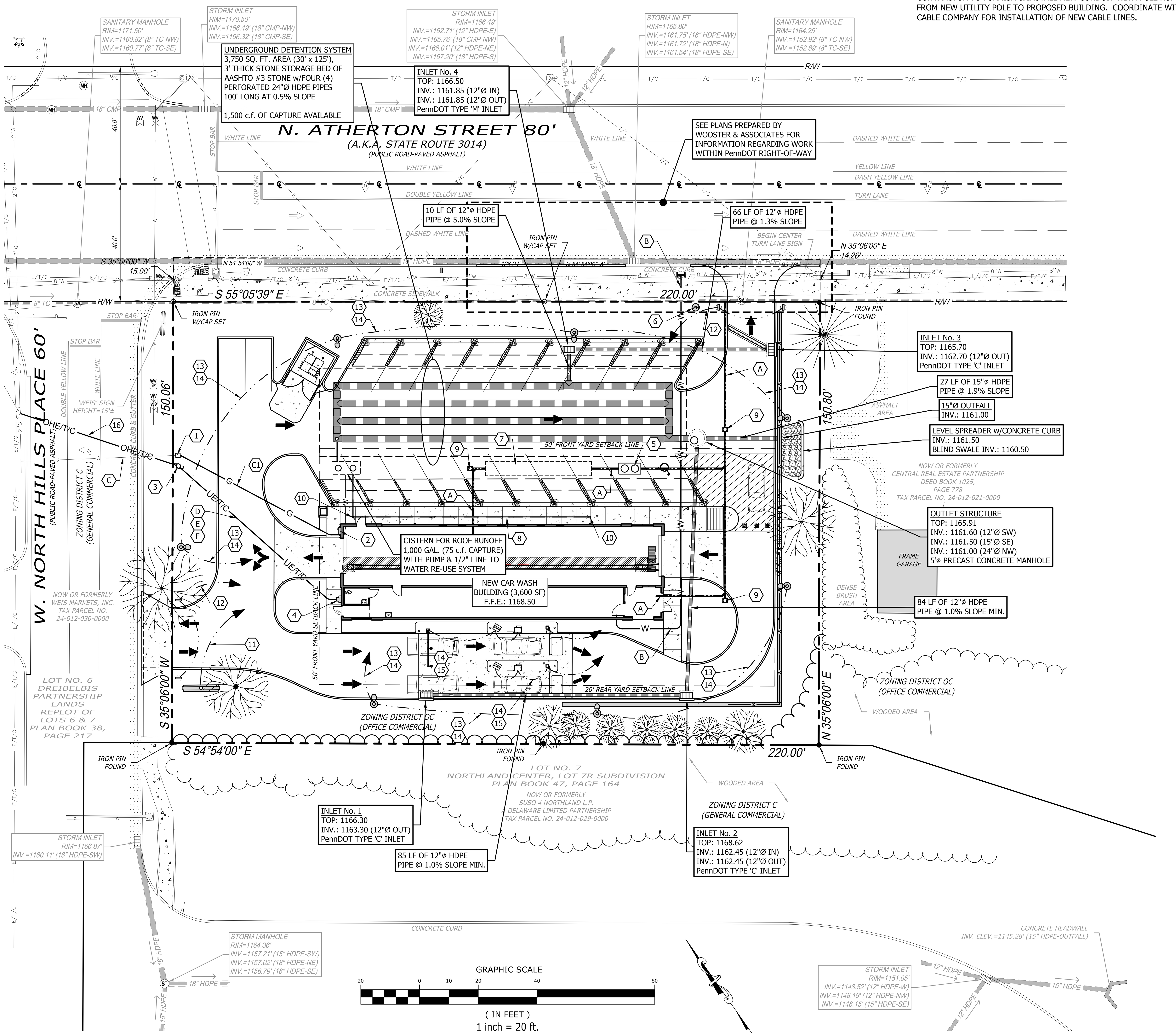

LEGEND OF SYMBOLS

- Proposed Gas Line
- Proposed Water Line
- Proposed Underground Electric, Telephone & Cable Service Lines
- Proposed Sanitary Lateral
- Proposed Storm Line
- Proposed Storm Inlets
- Proposed Sanitary Cleanout
- Proposed Electric Meter
- Proposed Gas Meter
- Water Line
- Gas Line
- Overhead Electric, Telephone & Cable Line
- Overhead Telephone & Cable Line
- Overhead Electric Line
- Storm Sewer
- Sanitary Sewer
- Easements
- Setback Line
- Depressed Curb
- Wooden/Vinyl Fence
- Guard Rail
- Tree Line
- Signal Poles
- Sign Poles
- Street Light
- Iron pin w/cap set (Unless otherwise noted)
- Iron Pin Found
- Sanitary Manhole
- Gas Meter
- Cleanout
- Gas Valve
- Storm Manhole
- Water Valve
- Storm Inlet
- Fire Hydrant
- Manhole
- Electric Meter
- Traffic Signal Base
- Utility Pole
- Sign
- Guy Wire
- Illuminated Signs
- AC Unit
- Light Pole
- Traffic Light
- Benchmark
- Traffic Flow Arrow
- Truncated Domes
- Turn Arrows
- Right-of-Way — R/W
- Handicap Symbol
- Shrub
- Trees
- Spot Elevation — +1165.07
- Existing Curb Elevations: TC=Top of Curb, FC=Bottom of Curb — 1165.50 TC / 1165.00 FC
- Asphalt
- Terra Cotta — T.C.
- Concrete
- Polyvinyl Chloride — PVC
- High Density Polyethylene — HDPE
- Gravel
- Finished Floor Elevation — F.F.E.
- Corrugated Metal Pipe — CMP
- Brick
- Reinforced Concrete Pipe — RCP

SEAL
COMMONWEALTH OF PENNSYLVANIA — REGISTERED PROFESSIONAL ENGINEER — CHRISTOPHER M PETERS — PE060187

REV	DATE	DESCRIPTION	BY

ALL WASHED UP! AUTO SPA

PREPARED BY:
MDM
SURVEYORS & ENGINEERS, LLC
Surveyors • Engineers • Site Planners
375 Northgate Drive
Warrendale, PA 15086
Ph: (724) 934-2810 Fax: (724) 934-2811
mdmcadd@mdmllc.com
www.mdmllc.com

CLIENT: ALL WASHED UP AUTO SPA

PROJECT: 1380 & 1386 N. ATHERTON STREET
TOWNSHIP OF FERGUSON, COUNTY OF CENTRE
COMMONWEALTH OF PENNSYLVANIA

SHEET TITLE
SITE UTILITY PLAN

DRAWN BY: CWT
CHECKED BY: CMP
ISSUE DATE: 8-29-2022

SHEET NUMBER
SP-4

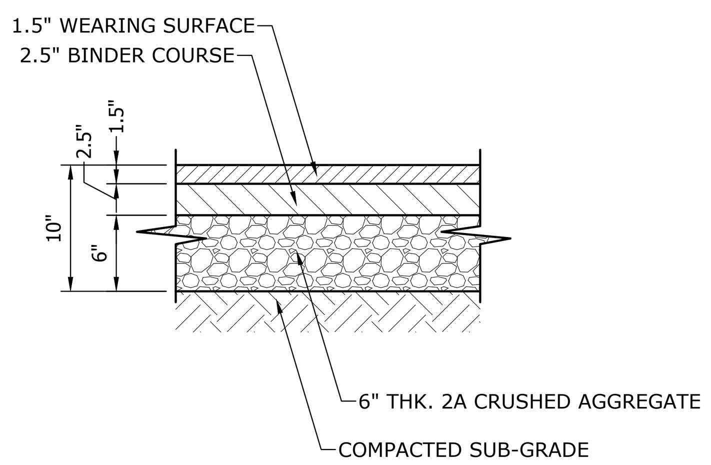

NOTES:
1. VERIFY PAVEMENT AND AGGREGATE THICKNESS WITH GEOTECHNICAL ENGINEER.
2. PROVIDE THIS PAVING SECTION WHERE INDICATED ON PLANS. (IN PARKING AREAS AND DRIVEWAYS.)

NOT TO SCALE

1 ASPHALT PAVEMENT SECTION

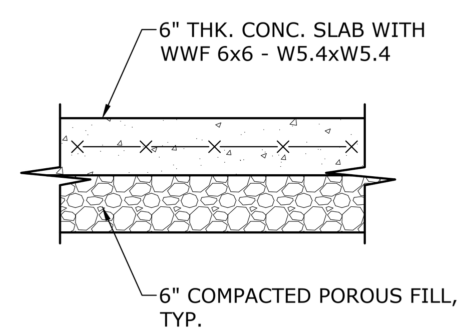

NOTES:
1. VERIFY PAVEMENT AND AGGREGATE THICKNESS WITH GEOTECHNICAL ENGINEER.
2. PROVIDE THIS PAVING SECTION WHERE INDICATED ON PLANS.

NOT TO SCALE

2 CONCRETE PAVEMENT SECTION

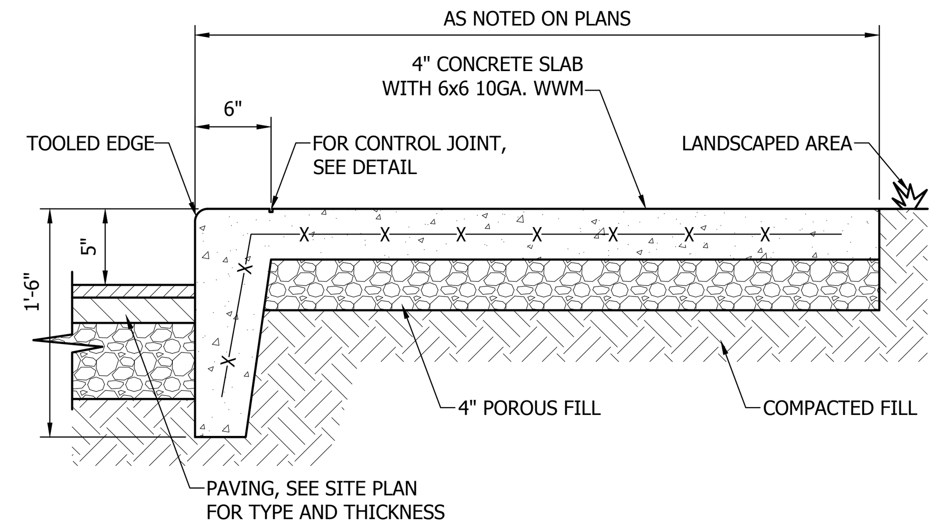

NOTE:
PROVIDE CONTROL JOINTS IN SIDEWALK AT 5'-0" O.C. AND EXPANSION JOINTS AT 20'-0" O.C.; SEE DETAIL, THIS SHEET. BROOM FINISH WALKS AND SLOPE TO WASH AT 1.0% (MIN.) - 2.0% (MAX.)

NOT TO SCALE

3 MONOLITHIC CONCRETE SIDEWALK

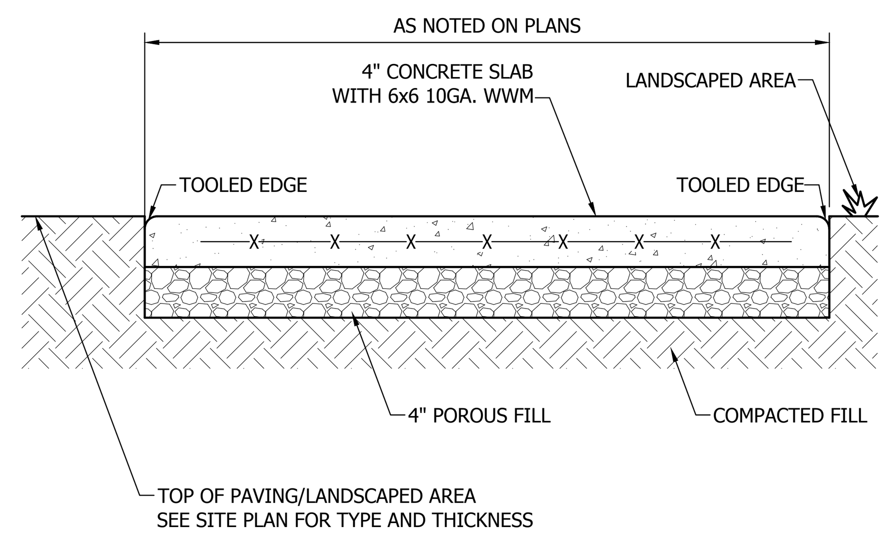

NOTE:
PROVIDE CONTROL JOINTS IN SIDEWALK AT 5'-0" O.C. AND EXPANSION JOINTS AT 20'-0" O.C.; SEE DETAIL, THIS SHEET. BROOM FINISH WALKS AND SLOPE TO WASH AT 1.0% (MIN.) - 2.0% (MAX.)

NOT TO SCALE

4 CONCRETE SIDEWALK DETAIL

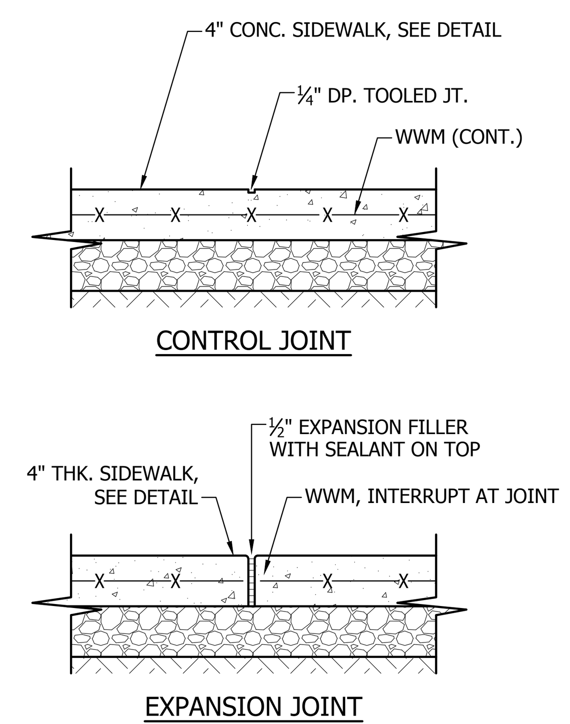

NOT TO SCALE

5 EXPANSION AND CONTROL JOINTS

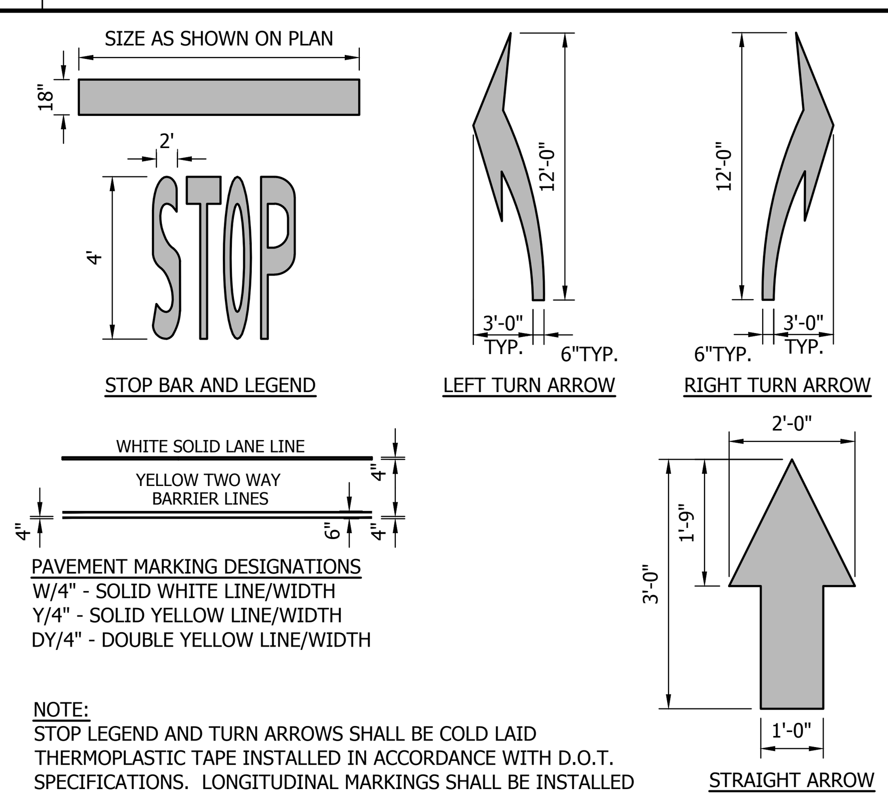

NOTE:
STOP LEGEND AND TURN ARROWS SHALL BE COLD LAID THERMOPLASTIC TAPE INSTALLED IN ACCORDANCE WITH D.O.T. SPECIFICATIONS. LONGITUDINAL MARKINGS SHALL BE INSTALLED IN ACCORDANCE WITH D.O.T. SPECIFICATIONS.

NOT TO SCALE

6 PAVEMENT MARKINGS

TRASH CORRAL NOTES:
1. POSTS, FENCING, GATES AND ACCESSORIES TO BE POLYVINYL CHLORIDE (PVC) COMPONENTS, AS MANUFACTURED BY CERTAINEED CORPORATION, AND DISTRIBUTED BY:
   BUFFTECH
   2525 WALDEN AVENUE
   BUFFALO, NY 14225
   800-233-0569
   COMMERCIAL SALES REPRESENTATIVE

EMAIL: bufftech@certainteed.com
CONTACT DISTRIBUTOR FOR LOCAL SALES AND INSTALLATION IN PROJECT AREA.

2. MATERIALS TO BE 6'-0" HIGH PRIVACY FENCING, CHESTERFIELD STYLE, WHITE, TAN OR CLAY COLOR AVAILABLE. ACTUAL COLOR TO BE SELECTED BY OWNER.
3. INSTALL TRASH CORRAL COMPONENTS IN ACCORDANCE WITH MANUFACTURER'S RECOMMENDATIONS.
4. ALL END POSTS AND POSTS DESIGNED TO RECEIVE HINGES FOR GATES ARE TO BE FILLED WITH CONCRETE, AND TWO (2) ½"ϕ VERTICAL REBAR POSITIONED AT OPPOSITE CORNERS AND HELD IN PLACE WITH REBAR SEPARATION CUPS, PER MANUFACTURER'S SPECIFICATIONS.
5. ALL GATE WINGS TO BE INSTALLED PER MANUFACTURER'S RECOMMENDATIONS, INCLUDING ALUMINUM GATE POST STIFFENER AND CROSS BRACING.
6. ALL GATE ASSEMBLIES TO INCLUDE HINGES, HARDWARE, LATCH ASSEMBLY AND DROP-PIN KIT.

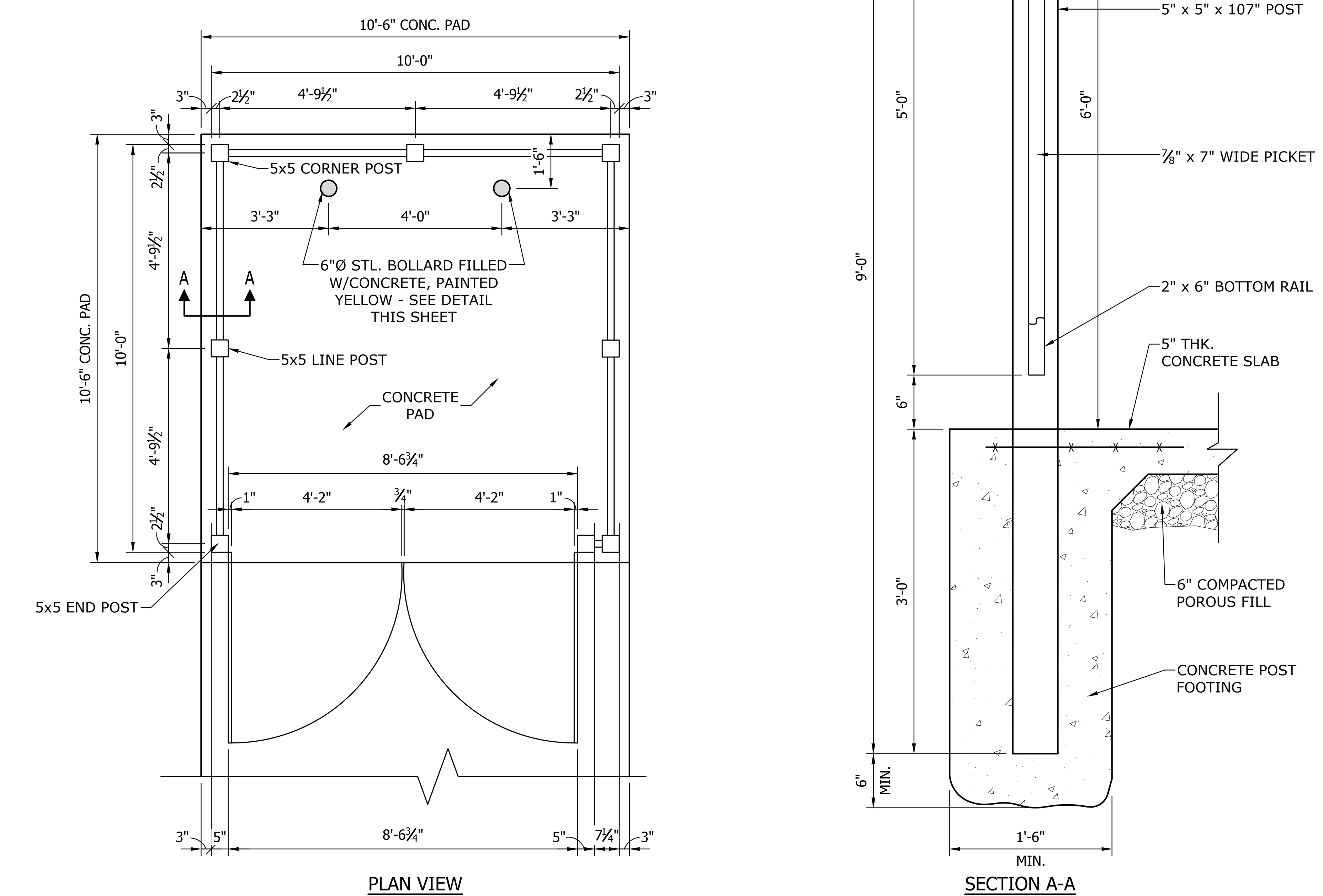

NOT TO SCALE

7 TRASH CORRAL DETAIL

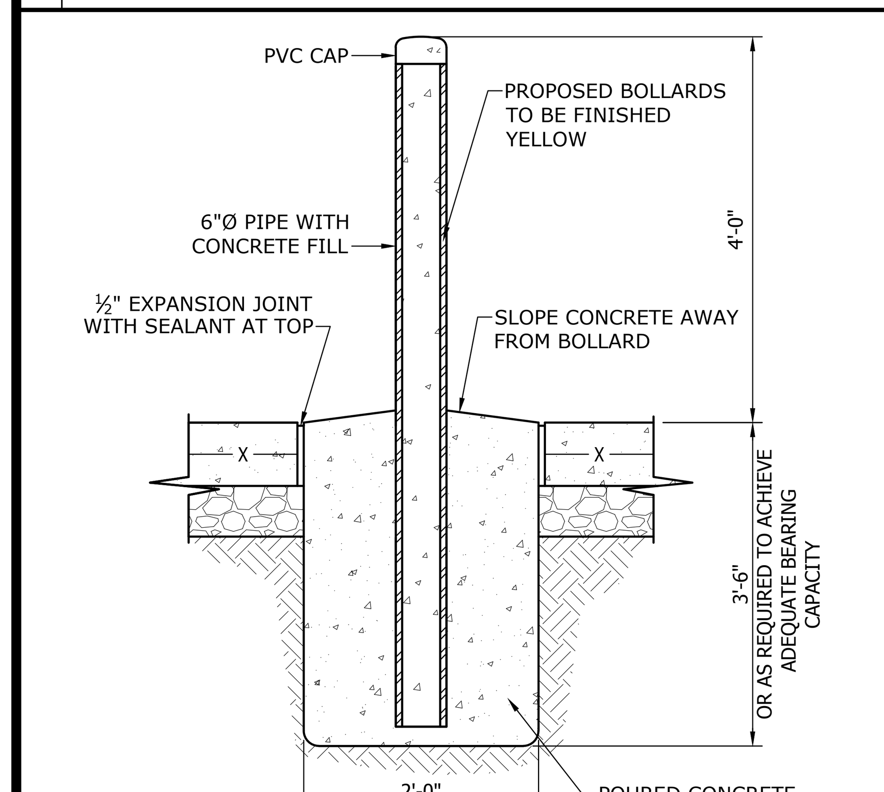

NOT TO SCALE

8 6"ϕ BOLLARD WITH CONCRETE BASE

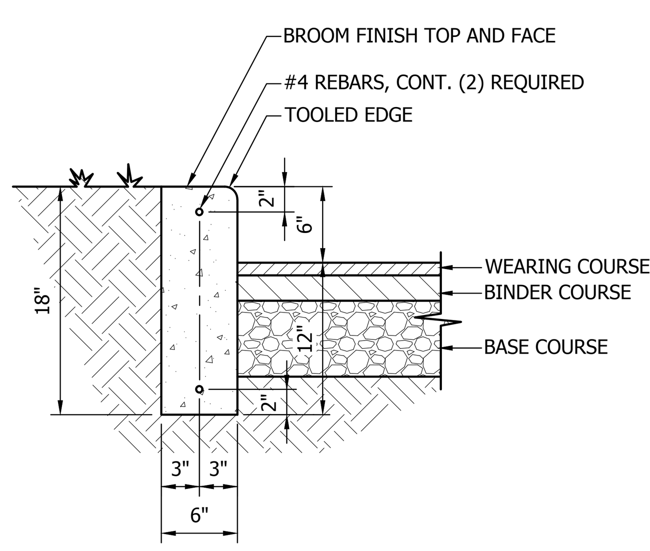

NOT TO SCALE

9 6" CAST-IN-PLACE CONCRETE CURB

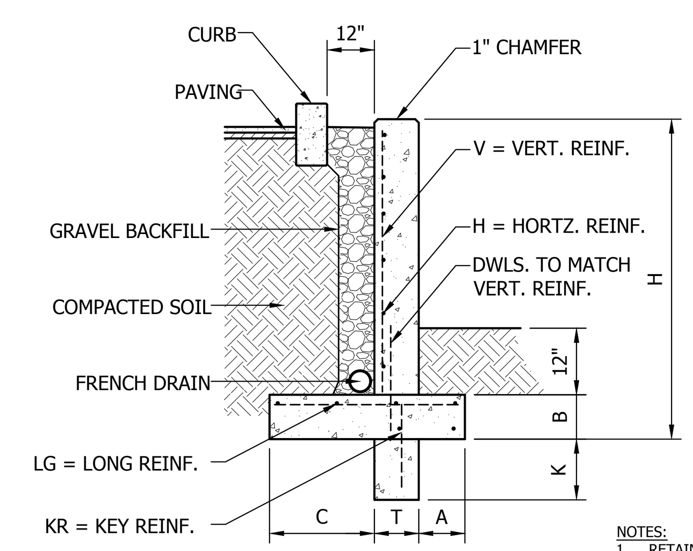

* DETAIL PROVIDED FOR REFERENCE ONLY. A LICENSED STRUCTURAL ENGINEER SHALL BE RETAINED BY OWNER OR CONTRACTOR FOR DESIGN AND CONSTRUCTION.

RETAINING WALL SCHEDULE

HT.	T	A	B	C	V	H	TR	LG	K	KR
2'-0"	12"	7"	1'-0"	1'-3"	#4@18"	#4@12"	-	#4@18"	-	-
3'-0"	12"	7"	1'-0"	3'-0"	#4@14"	#4@12"	#4@14"	#4@16"	-	-
4'-0"	12"	10"	1'-0"	3'-9"	#4@12"	#4@12"	#4@12"	#4@14"	-	-
5'-0"	12"	1'-4"	1'-0"	4'-9"	#5@12"	#4@12"	#5@12"	#4@12"	-	-
6'-0"	12"	1'-6"	1'-2"	5'-0"	#5@12"	#4@12"	#5@12"	#4@12"	1'-0"	#4@12"

NOTES:
1. RETAINING WALL CONTRACTOR TO REFER TO GEOTECHNICAL REPORT FOR RECOMMENDATIONS REGARDING SOIL BEARING CAPACITY, BACKFILL REQUIREMENTS, ETC.
2. CONTRACTOR TO PROVIDE SHOP DRAWINGS PREPARED BY A LICENSED, PROFESSIONAL ENGINEER WITH DETAILS REGARDING FOOTER SIZE, REBAR, REQUIREMENTS, ETC., PRIOR TO CONSTRUCTION.

NOT TO SCALE

10 POURED-IN-PLACE CONCRETE RETAINING WALL

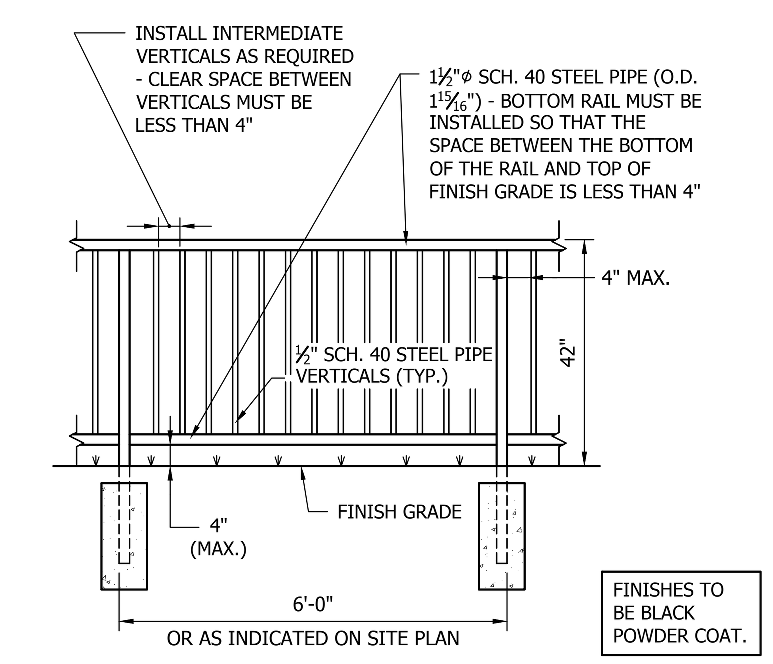

NOT TO SCALE

11 PEDESTRIAN SAFETY RAILING

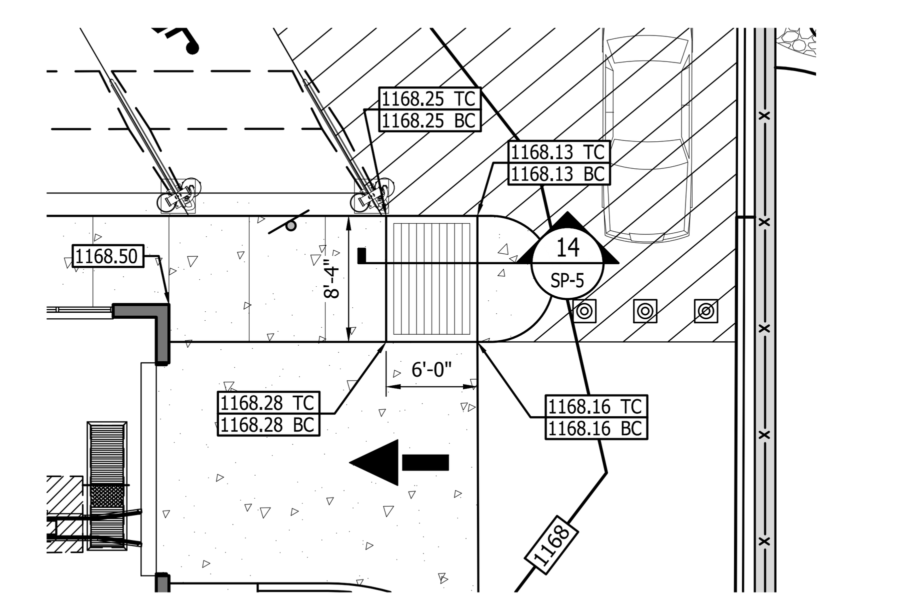

SCALE: 1"=10'-0"

12 RAMP DETAIL @ ACCESSIBLE PARKING

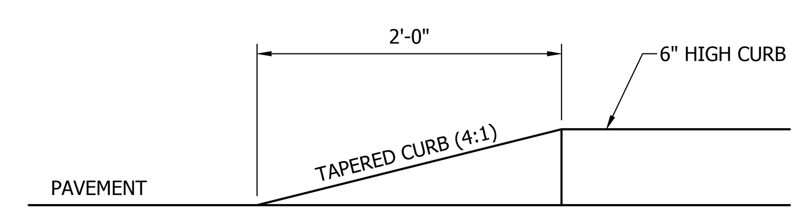

NOT TO SCALE

13 TAPER END OF CURB

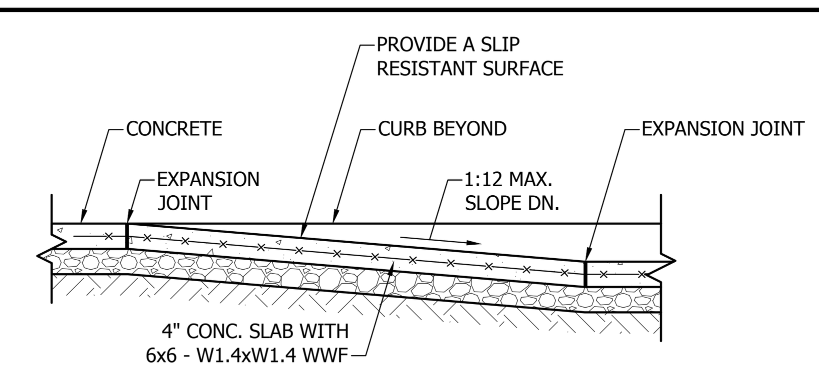

NOT TO SCALE

14 SECTION @ RAMP

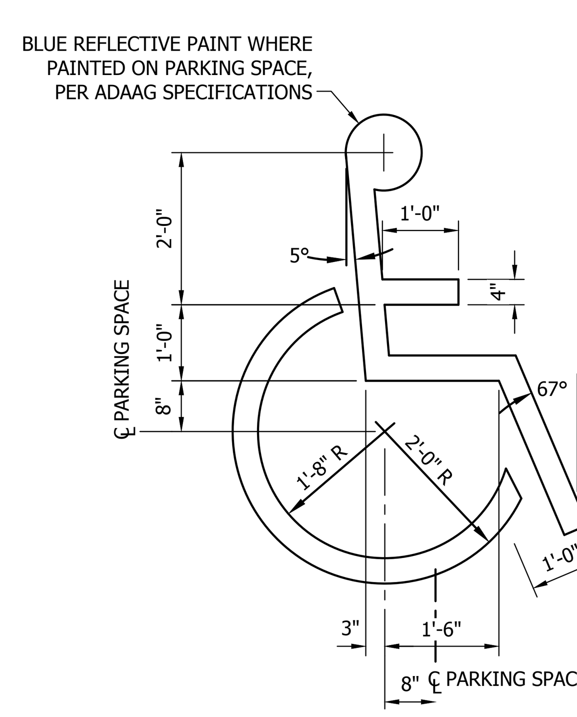

NOT TO SCALE

15 PAINTED ACCESSIBLE PARKING SYMBOL

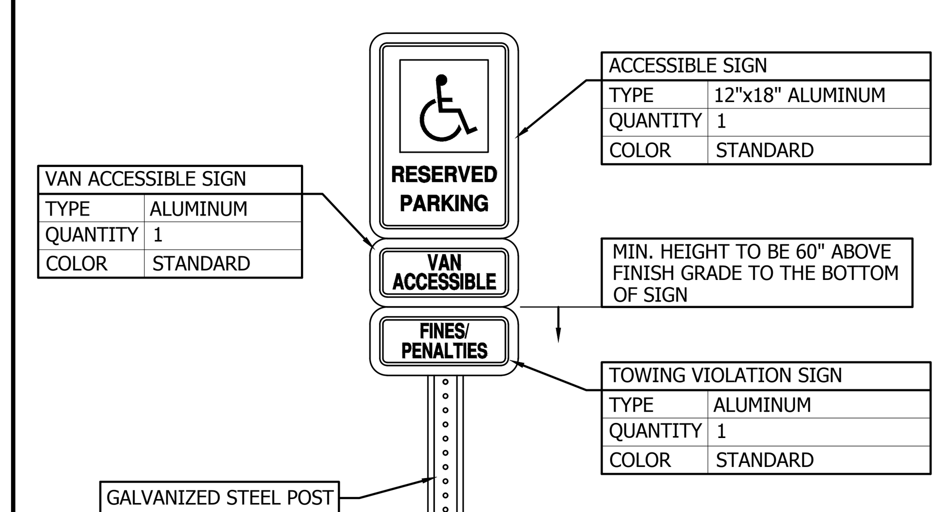

NOTES:
SIGNS ARE TO BE MOUNTED TO A GALVANIZED STEEL POST SET 48"(MIN.) INTO CONCRETE PIPE BOLLARD.

ALL SIGNS MUST BE INSTALLED PERPENDICULAR TO THE PARKING STALL.

CONTRACTOR TO VERIFY ACCESSIBLE PARKING SIGN REQUIREMENTS WITH LOCAL JURISDICTION PRIOR TO ORDERING OR INSTALLING ANY SIGNAGE.

NOT TO SCALE

16 ACCESSIBLE PARKING SIGN

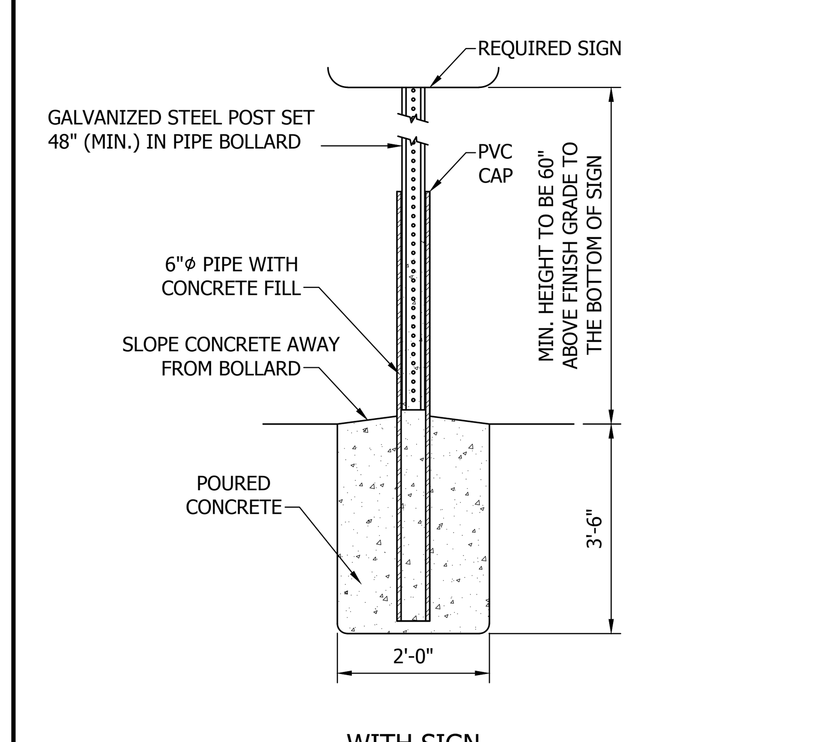

NOT TO SCALE

17 GUARD POST

SEAL

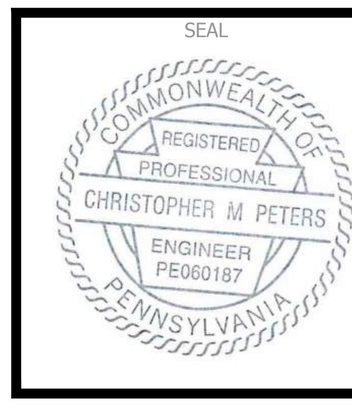

REV	DATE	DESCRIPTION	BY

ALL WASHED UP! AUTO SPA

PREPARED BY:
MDM
SURVEYORS & ENGINEERS, LLC
Surveyors • Engineers • Site Planners
375 Northgate Drive
Warrendale, PA 15086
Ph: (724) 934-2810 Fax: (724) 934-2811
mdmcadd@mdmllc.com
www.mdmllc.com

CLIENT: ALL WASHED UP AUTO SPA

PROJECT: 1380 & 1386 N. ATHERTON STREET
TOWNSHIP OF FERGUSON, COUNTY OF CENTRE
COMMONWEALTH OF PENNSYLVANIA

SHEET TITLE
SITE DETAILS

DRAWN BY: CWT
CHECKED BY: CMP
ISSUE DATE: 8-29-2022

SHEET NUMBER
SP-5

COPYRIGHT 2022 - MDM, LLC 9/06/2022 - 2:43pm W:\All Washed Up Auto Spa\State College, PA\Civil Docs\SP-5 - Site Details.dwg

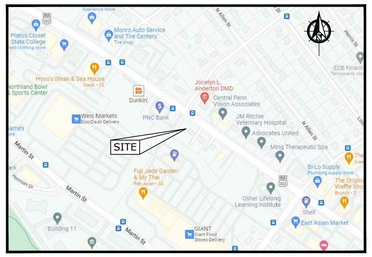

SITE LOCATION MAP
SCALE: 1" = 500'

Dig Serial No.: 20212860668
Design Serial No.: 20212860672

CALL BEFORE YOU DIG !
PENNSYLVANIA LAW REQUIRES 3 WORKING DAYS NOTICE FOR CONSTRUCTION PHASE AND 10 WORKING DAYS IN DESIGN STAGE - STOP CALL
PENNSYLVANIA ONE CALL SYSTEM, INC.
1-800-242-1776

GRAPHIC SCALE
20 0 10 20 40 80
(IN FEET)
1 inch = 20 ft.

GENERAL NOTES

1. ALL LANDSCAPE AREAS TO BE GRASS COMMON TO REGION EXCEPT WHERE OTHER PLANT MATERIAL IS CALLED FOR.
2. ALL TREES AND SHRUBS TO BE PLANTED IN MULCH BEDS WITH EDGE STRIPS TO SEPARATE TURF GRASS AREAS.
3. FOR ANY LANDSCAPE AREA SO DESIGNATED TO REMAIN WHETHER ON OR OFF SITE, REMOVE WEEDS, ROCKS, CONSTRUCTION ITEMS, ETC., THEN SCARIFY AREA, RESEED, AND FERTILIZE. R.O.W. CURB AND GUTTERS ARE TO BE CLEANED OF DEBRIS.
4. FINISHED GRADES IN LANDSCAPE ISLANDS SHALL BE INSTALLED SO THAT THEY ARE 1" LOWER THAN THE TOP OF THE SURROUNDING CURB.
5. PROVIDE A WEED MAT FOR ALL PLANTING AREAS.
6. FOR ANY TREE LOCATED NEAR A DRIVEWAY/DRIVE AISLE, PRUNE LOWER BRANCHES TO PROVIDE A MINIMUM 6'-0" HIGH CLEAR SIGHT LINE FROM GRADE.

PLANT LIST

QTY.	KEY	BOTANICAL/COMMON NAME	MATURE SIZE	ROOT TYPE	REMARKS	CANOPY AREA
4	AR	ACER RUBRUM 'OCTOBER GLORY' / OCTOBER GLORY RED MAPLE	2" CAL.	B & B		
2	CC	CERCIS CANADENSIS / REDBUD	2" CAL.	B & B		
27	BS	BUXUS SEMPERVIRENS / ENGLISH BOXWOOD	24"-30" HGT.	No. 2 CONT.		
62	JC	JUNIPERUS CHINENSIS 'SEA GREEN' / SEA GREEN JUNIPER	24" MIN. HGT.	B & B		
14	TO	THUJA OCCIDENTALIS 'TECHNY' / MISSION ARBORVITAE	48"-60" HGT.	No. 2 CONT.		
21	IV	ITEA VIRGINICA / VIRGINIA SWEETSPIRE	36" MIN. HGT.	No. 3 CONT.		
36	RB	RUDBECKIA FULGIDA 'SPECIOSA' / BLACK-EYED SUSAN	18"-24" HGT.	No. 2 CONT.		
1	EX1	AMELANCHIER CANADENSIS / SERVICEBERRY	_	4" D.B.H.	RELOCATED CANOPY TREE	210 SF
1	EX2	MALUS SPP. / FLOWERING CRABAPPLE	_	6" D.B.H.	RELOCATED CANOPY TREE	315 SF
1	EX3	QUERCUS ALBA / WHITE OAK	_	18" D.B.H.	EXISTING CANOPY TREE	392 SF
1	EX4	MALUS SPP. / FLOWERING CRAB	_	6" D.B.H.	EXISTING UNDERSTORY TREE	

LEGEND

- SEED — SEE SPECIFICATIONS
- MULCH BED
- RIVER ROCK OVER WEED MAT
- QUANTITY → 1 / TYPE → A
- AR - DECIDUOUS TREE
- CC - DECIDUOUS TREE
- IV - DECIDUOUS SHRUB
- IG - EVERGREEN SHRUB
- BS - EVERGREEN SHRUB
- JC - EVERGREEN SHRUB
- TO - EVERGREEN SHRUB
- RB - PERENNIAL

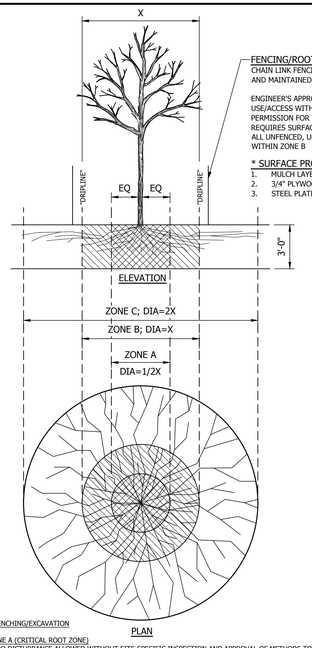

FENCING/ROOT PROTECTION
CHAIN LINK FENCING TO BE PROVIDED AND MAINTAINED AT DRIPLINE

ENGINEER'S APPROVAL REQUIRED FOR USE/ACCESS WITHIN ZONE B - PERMISSION FOR USE/ACCESS REQUIRES SURFACE PROTECTION FOR ALL UNFENCED, UNPAVED SURFACES WITHIN ZONE B

* SURFACE PROTECTION MEASURES
1. MULCH LAYER, 6"-8" DEPTH
2. 3/4" PLYWOOD
3. STEEL PLATES

PLAN

TRENCHING/EXCAVATION

ZONE A (CRITICAL ROOT ZONE)
1. NO DISTURBANCE ALLOWED WITHOUT SITE-SPECIFIC INSPECTION AND APPROVAL OF METHODS TO MINIMIZE ROOT DAMAGE.
2. SEVERANCE OF ROOTS LARGER THAN 2" DIA. REQUIRES ENGINEER'S APPROVAL.
3. TUNNELING REQUIRED TO INSTALL LINES 3'-0" BELOW GRADE OR DEEPER.

ZONE B (DRIPLINE)
1. OPERATION OF HEAVY EQUIPMENT AND/OR STOCKPILING OF MATERIALS SUBJECT TO ENGINEER'S APPROVAL.
2. SURFACE PROTECTION* MEASURES REQUIRED. TRENCHING ALLOWED AS FOLLOWS:
   - LIMIT TRENCH WIDTH. DO NOT DISTURB ZONE A.
   - MAINTAIN 2/3 OR MORE OF ZONE B IN UNDISTURBED CONDITION.
   - TUNNELING MAY BE REQUIRED FOR TRENCHES DEEPER THAN 3'-0".
3. EXCAVATION BY HAND OR WITH HAND-DRIVEN TRENCHER MAY BE REQUIRED.

ZONE C (FEEDER ROOT ZONE)
1. OPERATION OF HEAVY EQUIPMENT AND/OR STOCKPILING OF MATERIALS SUBJECT TO ENGINEER'S APPROVAL.
2. SURFACE PROTECTION* MEASURES MAY BE REQUIRED. TRENCHING WITH HEAVY EQUIPMENT ALLOWED AS FOLLOWS:
   - MINIMIZE TRENCH WIDTH.
   - MAINTAIN 2/3 OR MORE OF ZONE C IN UNDISTURBED CONDITION.

NOT TO SCALE

1 TREE PROTECTION DETAIL

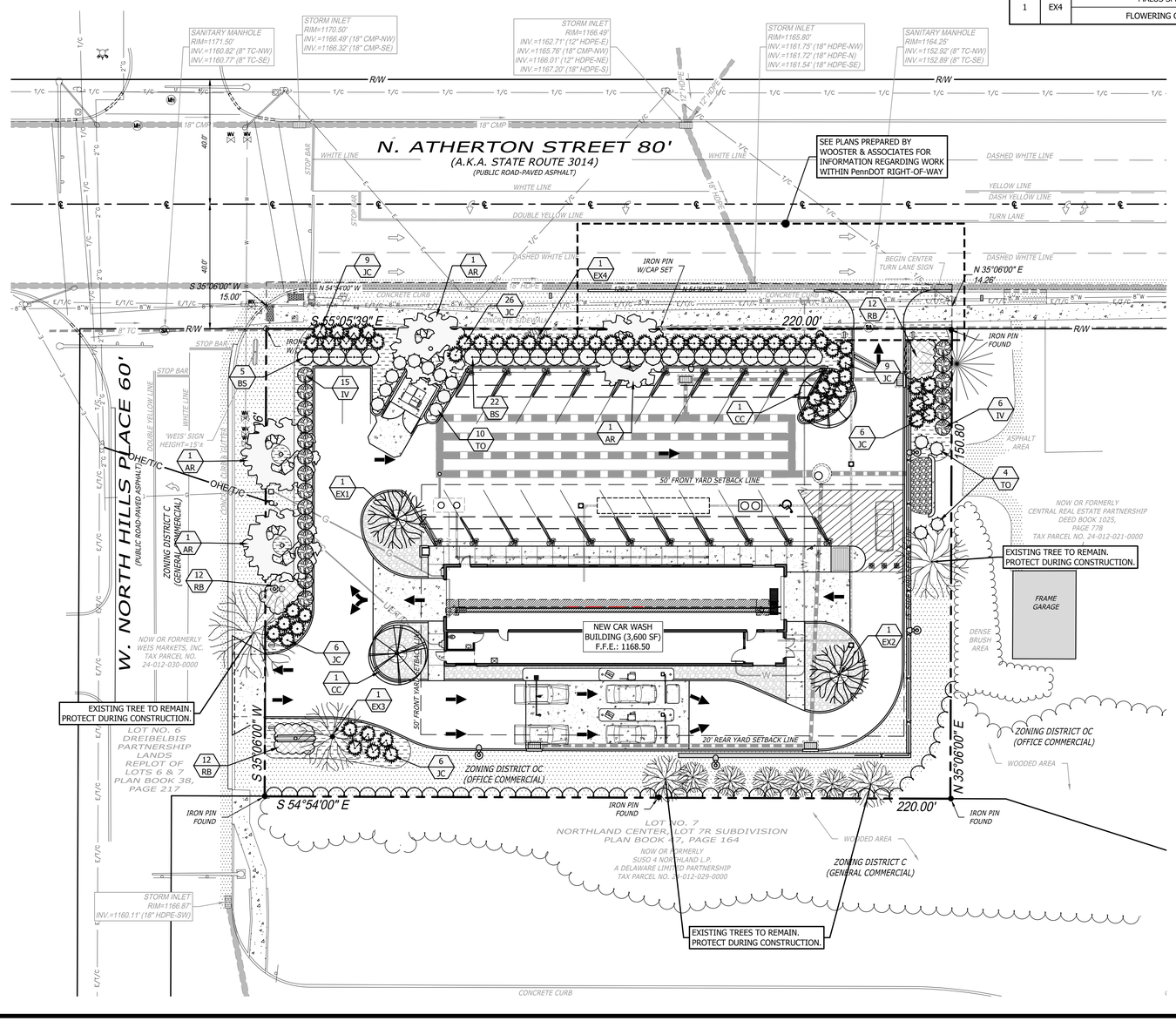

LEGEND OF SYMBOLS

Water Line, Gas Line, Overhead Electric, Telephone & Cable Line, Overhead Telephone & Cable Line, Overhead Electric Line, Storm Sewer, Sanitary Sewer, Easements, Setback Line, Depressed Curb, Wooden/Vinyl Fence, Guard Rail, Tree Line, Signal Poles, Sign Poles, Street Light, Iron pin w/cap set (Unless otherwise noted), Iron Pin Found, Sanitary Manhole, Gas Meter, Cleanout, Gas Valve, Storm Manhole, Water Valve, Storm Inlet, Fire Hydrant, Manhole, Electric Meter, Traffic Signal Base, Utility Pole, Sign, Guy Wire, Illuminated Signs, AC Unit, Light Pole, Traffic Light, Benchmark, Traffic Flow Arrow, Truncated Domes, Turn Arrows, Right-of-Way (R/W), Handicap Symbol, Shrub, Trees, Asphalt, Terra Cotta (T.C.), Concrete, Polyvinyl Chloride (PVC), High Density Polyethylene (HDPE), Finished Floor Elevation (F.F.E.), Gravel, Corrugated Metal Pipe (CMP), Reinforced Concrete Pipe (RCP), Brick

SEAL

REV | DATE | DESCRIPTION | BY

ALL WASHED UP AUTO SPA

PREPARED BY:
MDM
SURVEYORS & ENGINEERS, LLC
Surveyors • Engineers • Site Planners
375 Rt. 59 Monroeville Plaza
Warrendale, PA 15086
Ph: (724) 934-2810 Fax: (724) 934-2811
mdmcadd@mdmllc.com
www.mdmllc.com

CLIENT: ALL WASHED UP AUTO SPA

PROJECT: 1380 & 1386 N. ATHERTON STREET
TOWNSHIP OF FERGUSON, COUNTY OF CENTRE
COMMONWEALTH OF PENNSYLVANIA

SHEET TITLE: LANDSCAPE PLAN

DRAWN BY: CWT
CHECKED BY: CMP
ISSUE DATE: 8-29-2022

SHEET NUMBER: SP-6

COPYRIGHT 2022 - MDM, LLC 8/29/2022 8:35am M:\08 Revised 19 Auto Spa\Civil Cadd\Plans\Site\SP-6 - Landscape Plan.dwg