WEST CHERRY LANE MULTI USE BUILDING

PRELIMINARY/FINAL LAND DEVELOPMENT PLAN

FERGUSON TOWNSHIP * CENTRE COUNTY * PENNSYLVANIA

SEPTEMBER 12, 2019
LAST REVISED DECEMBER 3, 2019

BEFORE YOU DIG ANYWHERE IN
PENNSYLVANIA ! CALL 1-800-242-1776
NON-MEMBERS MUST BE CONTACTED DIRECTLY

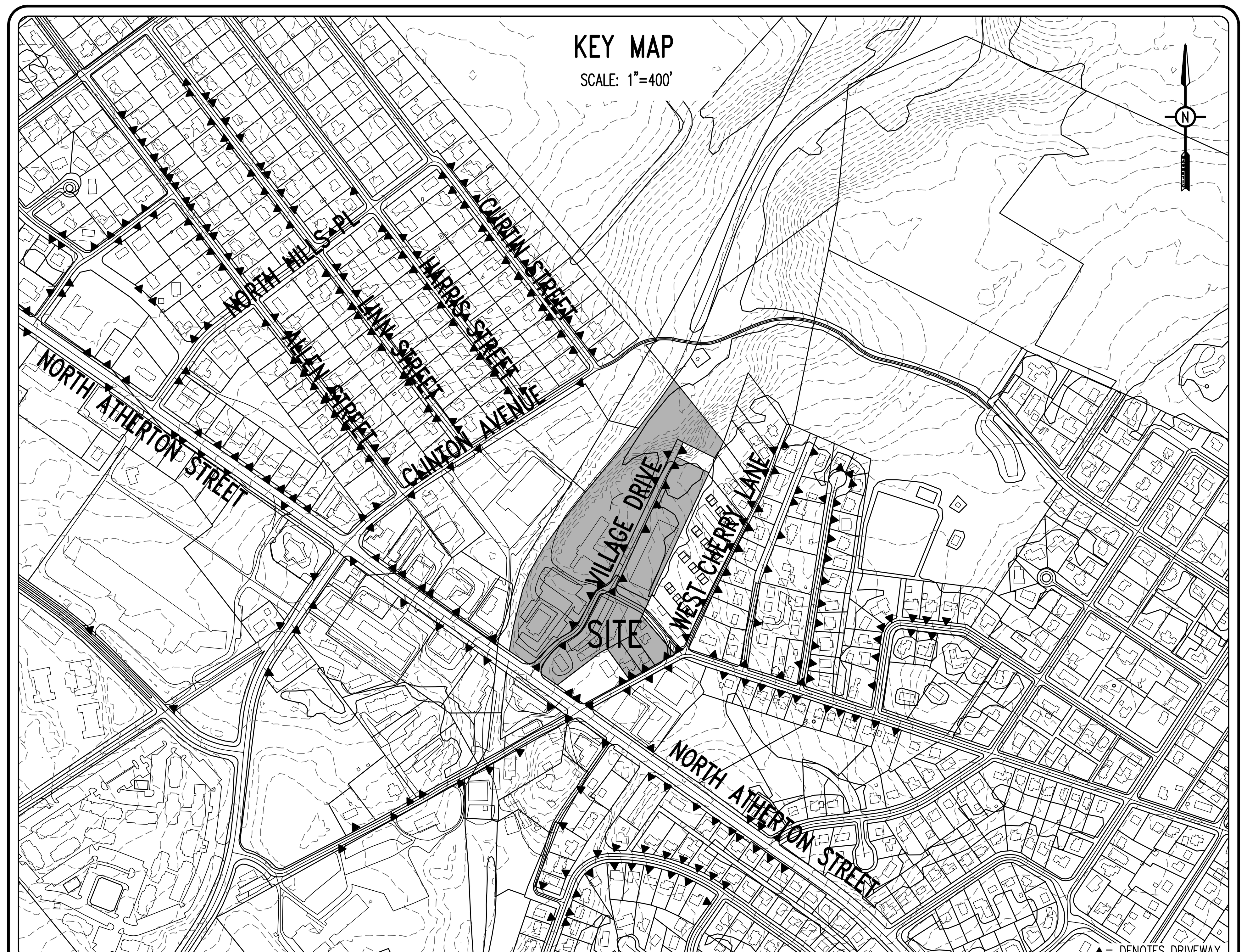

PennTerra
ENGINEERING, INC.

CENTRAL PENNSYLVANIA REGION OFFICE:
3075 ENTERPRISE DRIVE
SUITE 100
STATE COLLEGE, PA 16801
PH: 814-231-8285
Fax: 814-237-2308

LANCASTER REGION OFFICE:
3904 B ABEL DRIVE
COLUMBIA, PA 17512
PH: 717-522-5031
Fax: 717-522-5046

WWW.PENNTERRA.COM

COMMONWEALTH OF PENNSYLVANIA
REGISTERED PROFESSIONAL
JOHN C. SEPP
ENGINEER
040003-E

COPYRIGHT 2019 BY THE ENGINEER

THE INFORMATION CONTAINED HEREON MAY NOT BE USED OR COPIED IN ANY MANNER WITHOUT THE WRITTEN PERMISSION OF THE ENGINEER EXCEPT AS OTHERWISE PROVIDED BY APPROPRIATE LAWS OR STATUTES.

© PENNTERRA ENGINEERING 2019 ALL RIGHTS RESERVED

TABLE OF CONTENTS

SHEET	DESCRIPTION
*1	COVER SHEET
*2	OVERALL EXISTING CONDITIONS PLAN
*3	DEMOLITION PLAN
(*4)	OVERALL LAND DEVELOPMENT PLAN
(*5)	RECORD PLAN
*6	GEOMETRY PLAN
(*7)	GRADING, UTILITY AND STORMWATER MANAGEMENT SITE PLAN
*8	LANDSCAPE PLAN
*9	LIGHTING PLAN
(*10)	STORMWATER CONSTRUCTION DETAILS
*11	GENERAL CONSTRUCTION DETAILS
*12	SITE CROSS SECTIONS & SIGN DETAILS
(*ES1)	EROSION AND SEDIMENTATION CONTROL PLAN
(*ES2)	EROSION AND SEDIMENTATION CONTROL DETAILS
(*ES3)	EROSION AND SEDIMENTATION CONTROL NARRATIVE
A1	BUILDING ARCHITECTURAL PLANS
	* DENOTES WHICH PLAN SHEETS ARE TO BE RECORDED
	(*X) DENOTES WHICH PLAN SHEETS ARE PART OF THE STORMWATER MANAGEMENT SITE PLAN

ACT 287 UTILITY INFORMATION
(SERIAL NUMBER: 20170591943)

SANITARY SEWER
UNIVERSITY AREA JOINT AUTHORITY
1576 SPRING VALLEY ROAD
STATE COLLEGE, PA 16801
PHONE: (814) 238-5361

PUBLIC WATER
STATE COLLEGE BOROUGH WATER AUTHORITY
1201 WEST BRANCH ROAD
STATE COLLEGE, PA 16801
PHONE: (814) 238-6766

NATURAL GAS
COLUMBIA GAS OF PENNSYLVANIA
2550 CAROLEAN INDUSTRIAL DRIVE
STATE COLLEGE, PA 16801
PHONE: (814) 238-6775

ELECTRIC
WEST PENN POWER COMPANY
2800 EAST COLLEGE AVENUE
STATE COLLEGE, PA 16801
PHONE: (814) 237-5721

TELEPHONE
VERIZON
224 SOUTH ALLEN STREET
STATE COLLEGE, PA 16801
PHONE: (814) 231-6511

CABLE TELEVISION
COMCAST
60 DECIBEL ROAD
STATE COLLEGE, PA 16801
PHONE: (800) 992-3515

STORMWATER

FERGUSON TOWNSHIP	PA DOT
3147 RESEARCH DRIVE	70 PENNDOT DRIVE
STATE COLLEGE, PA 16801	CLEARFIELD, PA 16830
PHONE: (814) 238-4651	PHONE: (814) 765-0400

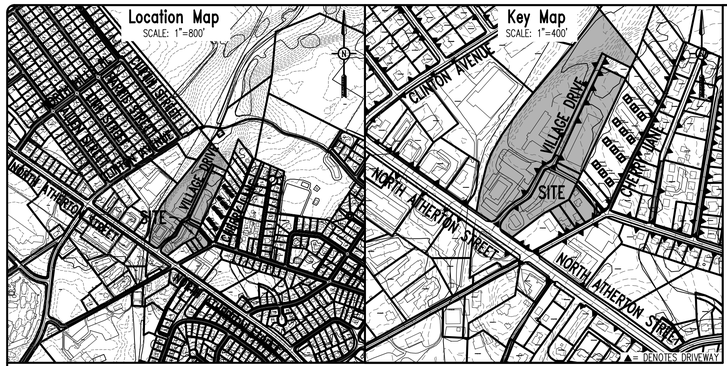

PROJECT NOTE:

The Total Number of Existing Parking Stalls (Before Restriping) is 403 Stalls.

EXISTING CURVE TABLE

CURVE	LENGTH	RADIUS	TANGENT	CHORD DIRECTION	CHORD	DELTA
C1	481.98'	928.46'	246.55'	N 24° 31' 33" E	476.58'	29° 44' 36"
C2	177.31'	1472.48'	88.76'	N 35° 56' 51" E	177.21'	06° 53' 58"

Act 287 Information: Serial # 20170591943

a. Sanitary Sewer: University Area Joint Authority
1576 Spring Valley Road
State College, PA 16801
(814) 238-5361

b. Public Water: State College Borough Water Authority
1201 West Branch Road
State College, PA 16801
(814) 238-6766

c. Natural Gas: Columbia Gas of Pennsylvania
2550 Carolean Industrial Drive
State College, PA 16801
(814) 238-6775

d. Electric: West Penn Power Company
2800 East College Avenue
State College, PA 16801
(814) 237-5721

e. Telephone: Verizon
224 South Allen Street
State College, PA 16801
(814) 231-6511

f. Cable Television: Comcast
60 Decibel Road
State College, PA 16801
(800) 992-3515

g. Stormwater: Ferguson Township
3147 Research Drive
State College, PA 16801
(814) 238-4651

PA DOT
70 PennDot Drive
Clearfield, PA 16830
(814) 765-0400

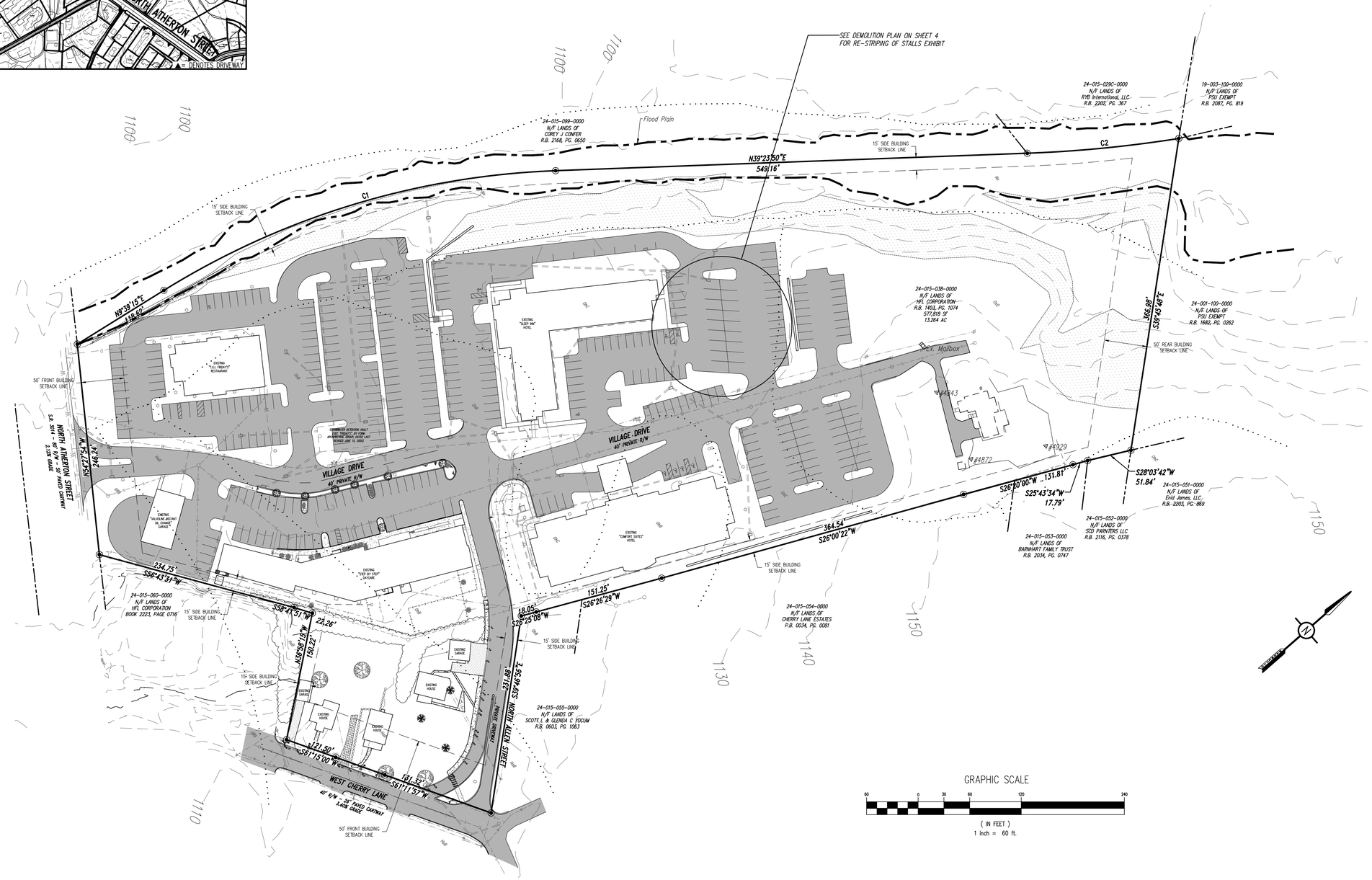

SURVEY FEATURES LEGEND

- Property Line, Lot Line or Right of Way Line
- Adjoining Property Line
- Building Setback Line
- Easement Line
- Roadway Center Line
- I.P. Found

EXISTING FEATURES LEGEND

- Existing Building
- Existing Curbing
- Existing Contours (10's)
- Existing Soil Limit Line / Boundary
- HaB Existing Soil Type
- Existing Tree Line
- Existing Overhead Utility Line w/ Pole
- Existing 6" & 8" PVC Sanitary Sewer w/ Manhole
- Existing 4", 6" & 8" D.I.P. Water Line w/ Valve
- Existing 2" & 4" Plastic & D.I.P. Gas Line
- Existing Underground Electric
- Existing 6" PVC & 12" PVC, 12", 15", 18" CMP Storm Sewer w/ Inlet
- Existing Concrete Areas
- Existing Gravel Areas
- Existing Retaining Wall
- Existing Vinyl/Wooden Fence
- Existing Fire Hydrant
- Existing Manhole
- Existing Utility Pole
- Existing Light Pole/Standard
- Existing Light Pole (Single Fixture)
- Existing Sign
- M.B. Existing Mail Box
- Existing Deciduous Tree
- Existing Evergreen Tree
- Existing Shrub
- 25% Slopes Or Greater
- Flood Plain

SOILS LEGEND

Soil cover on the site consists of:
HaB – Hagerstown Silt Loam, 3%-8% Slopes
No – Nolin Silt Loam, Local Alluvium, 0%-5% Slopes
OhB – Opequon-Hagerstown Complex, 3%-8% Slopes
OhC – Opequon-Hagerstown Complex, 8%-15% Slopes
OsD – Opequon-Rock Outcrop Complex, 8%-25% Slopes
URB – Urban Land-Hagerstown Complex, Gently Sloping

GRAPHIC SCALE
60 0 30 60 120 240
(IN FEET)
1 inch = 60 ft.

BEFORE YOU DIG ANYWHERE IN PENNSYLVANIA | CALL 1-800-242-1776
NON-MEMBERS MUST BE CONTACTED DIRECTLY

PennTerra ENGINEERING INC.

CENTRAL PENNSYLVANIA REGION OFFICE:
3075 ENTERPRISE DRIVE
SUITE 100
STATE COLLEGE, PA 16801
PH: 814-231-8285
Fax: 814-237-2308

LANCASTER REGION OFFICE:
3904 B ABEL DRIVE
COLUMBIA, PA 17512
PH: 717-522-5031
Fax: 717-522-5046

WWW.PENNTERRA.COM

COPYRIGHT 2019 BY THE ENGINEER
THE INFORMATION CONTAINED HEREON MAY NOT BE USED OR COPIED IN ANY MANNER WITHOUT THE WRITTEN PERMISSION OF THE ENGINEER EXCEPT AS OTHERWISE PROVIDED BY APPROPRIATE LAWS OR STATUTES.
© PENNTERRA ENGINEERING 2019
ALL RIGHTS RESERVED

COMMONWEALTH OF PENNSYLVANIA REGISTERED PROFESSIONAL JOHN C. SEPP ENGINEER 040003-E Seal

COMMONWEALTH OF PENNSYLVANIA REGISTERED PROFESSIONAL NEVIN L. GROVE LAND SURVEYOR No. SU061171 Seal

Designer: RRK
Draftsman: JDB
Proj.Manager: JCS
Surveyor: ----
Perimeter Ck.:
Book: ---- Pg: ----
Drive: Layout: 16094-02-OVERALL
Acad: OVERALL PLAN - 24"X36"

Date	Description
12-3-19 MLH	REVISED PER TWP COMMENTS
11-1-19 MLH	REVISED PER TWP COMMENTS

REVISIONS

WEST CHERRY LANE MULTI USE BUILDING

FERGUSON TOWNSHIP
CENTRE COUNTY
PENNSYLVANIA

PRELIMINARY/FINAL LAND DEVELOPMENT PLAN

OVERALL EXISTING CONDITIONS PLAN

PROJECT NO. 16094.01
DATE SEPTEMBER 12, 2019
SCALE 1"=60'
SHEET NO. 2

P:\dotproj\2016\16094\dwg\plot files\final plans\FINAL PLANS - REVISED\16094-02-OVERALL.dwg, 12/4/2019 11:46:45 AM, 1:1

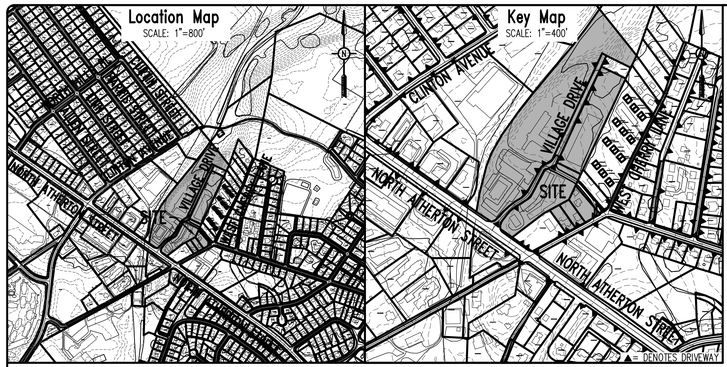

Act 287 Information: Serial # 20170591943

a. Sanitary Sewer: University Area Joint Authority
1576 Spring Valley Road
State College, PA 16801
(814) 238-5361

b. Public Water State College Borough Water Authority
1201 West Branch Road
State College, PA 16801
(814) 238-6766

c. Natural Gas Columbia Gas of Pennsylvania
2550 Corolean Industrial Drive
State College, PA 16801
(814) 238-6775

d. Electric West Penn Power Company
2800 East College Avenue
State College, PA 16801
(814) 237-5721

e. Telephone: Verizon
224 South Allen Street
State College, PA 16801
(814) 231-6511

f. Cable Television: Comcast
60 Decibel Road
State College, PA 16801
(800) 992-3515

g. Stormwater: Ferguson Township
3147 Research Drive
State College, PA 16801
(814) 238-4651

PA DOT
70 PennDot Drive
Clearfield, PA 16830
(814) 765-0400

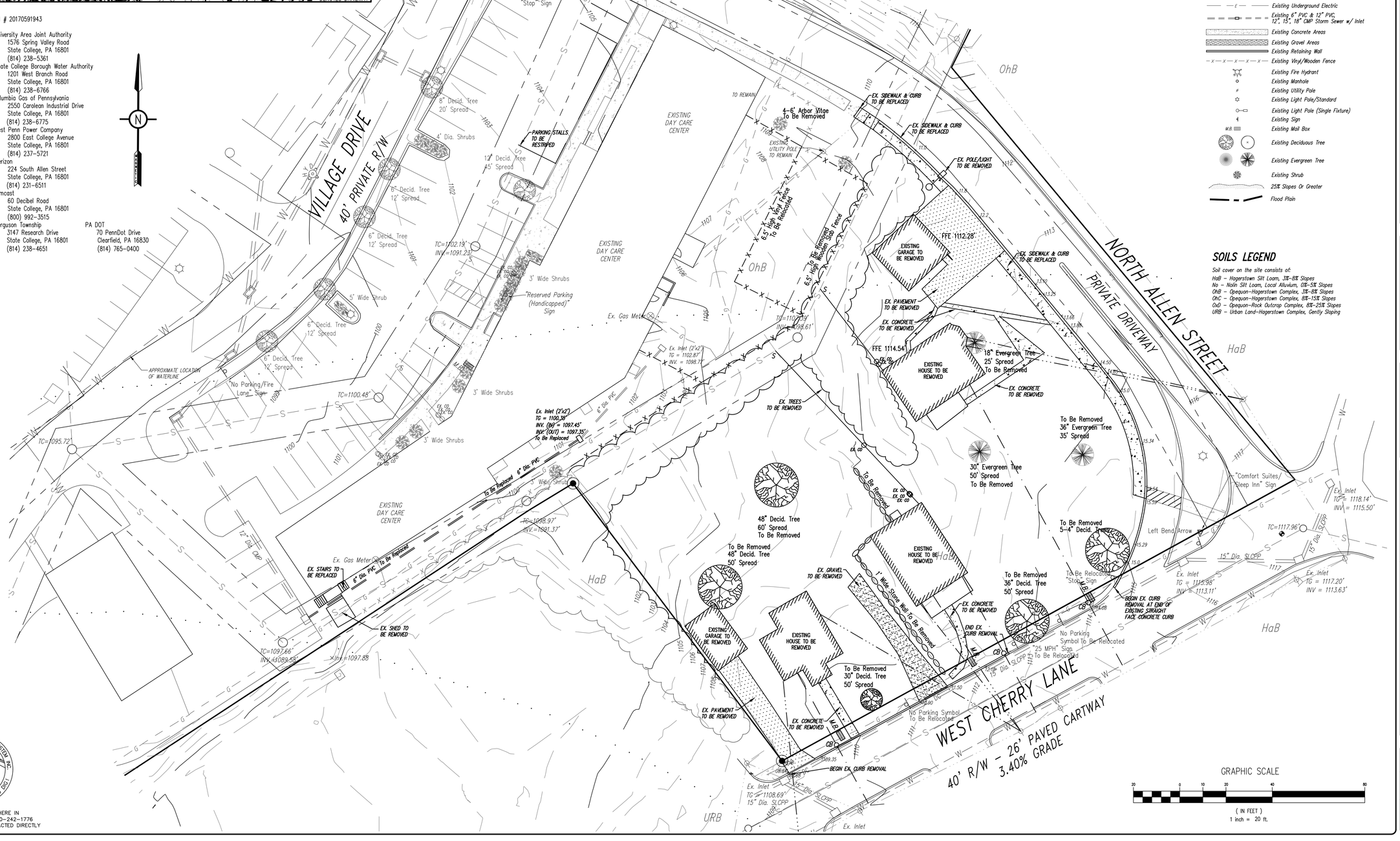

BEFORE YOU DIG ANYWHERE IN PENNSYLVANIA | CALL 1-800-242-1776
NON-MEMBERS MUST BE CONTACTED DIRECTLY

SURVEY FEATURES LEGEND

- Property Line, Lot Line or Right of Way Line
- Adjoining Property Line
- Building Setback Line
- Easement Line
- Roadway Center Line
- I.P. Found
- Project Benchmark

EXISTING FEATURES LEGEND

- Existing Building
- Existing Curbing
- Existing Contours (10's)
- Existing Soil Limit Line / Boundary
- HaB Existing Soil Type
- Existing Tree Line
- Existing Overhead Utility Line w/ Pole
- Existing 6" & 8" PVC Sanitary Sewer w/ Manhole
- Existing 4", 6" & 8" D.I.P. Water Line w/ Valve
- Existing 2" & 4" Plastic & D.I.P. Gas Line
- Existing Underground Electric
- Existing 6" PVC & 12" PVC, 12", 15", 18" CMP Storm Sewer w/ Inlet
- Existing Concrete Areas
- Existing Gravel Areas
- Existing Retaining Wall
- Existing Vinyl/Wooden Fence
- Existing Fire Hydrant
- Existing Manhole
- Existing Utility Pole
- Existing Light Pole/Standard
- Existing Light Pole (Single Fixture)
- Existing Sign
- M.B. Existing Mail Box
- Existing Deciduous Tree
- Existing Evergreen Tree
- Existing Shrub
- 25% Slopes Or Greater
- Flood Plain

SOILS LEGEND

Soil cover on the site consists of:

HaB – Hagerstown Silt Loam, 3%-8% Slopes
Na – Nolin Silt Loam, Local Alluvium, 0%-5% Slopes
OhB – Opequon-Hagerstown Complex, 3%-8% Slopes
OhC – Opequon-Hagerstown Complex, 8%-15% Slopes
OuD – Opequon-Rock Outcrop Complex, 8%-25% Slopes
URB – Urban Land-Hagerstown Complex, Gently Sloping

PennTerra ENGINEERING INC.

CENTRAL PENNSYLVANIA REGION OFFICE:
3075 ENTERPRISE DRIVE
SUITE 100
STATE COLLEGE, PA 16801
PH: 814-231-8285
Fax: 814-237-2308

LANCASTER REGION OFFICE:
3904 B ABEL DRIVE
COLUMBIA, PA 17512
PH: 717-522-5031
Fax: 717-522-5046

WWW.PENNTERRA.COM

COPYRIGHT 2019 BY THE ENGINEER
THE INFORMATION CONTAINED HEREON MAY NOT BE USED OR COPIED IN ANY MANNER WITHOUT THE WRITTEN PERMISSION OF THE ENGINEER EXCEPT AS OTHERWISE PROVIDED BY APPROPRIATE LAWS OR STATUTES.
© PENNTERRA ENGINEERING 2019
ALL RIGHTS RESERVED

COMMONWEALTH OF PENNSYLVANIA
REGISTERED PROFESSIONAL
JOHN C. SEPP
ENGINEER
040003-E
Seal

Designer RRK
Draftsman JDB
Proj.Manager JCS
Surveyor ----
Perimeter Ck.
Book ---- Pg ----
Drive Layout 16094-03-EX-DEMO
Acad DEMO-24'X36'

Date	Description
12-3-19 MLH	REVISED PER TWP COMMENTS
11-1-19 MLH	REVISED PER TWP COMMENTS

REVISIONS

WEST CHERRY LANE MULTI USE BUILDING

FERGUSON TOWNSHIP
CENTRE COUNTY
PENNSYLVANIA

PRELIMINARY/FINAL LAND DEVELOPMENT PLAN

DEMOLITION PLAN

PROJECT NO. 16094.01
DATE SEPTEMBER 12, 2019
SCALE 1"=20'
SHEET NO. 3

P:\sdtproj\2016\16094\dwg\plot files\final plans\FINAL PLANS - REVISED\16094-03-EX-DEMO.dwg, 12/4/2019 11:47:12 AM, 1:1

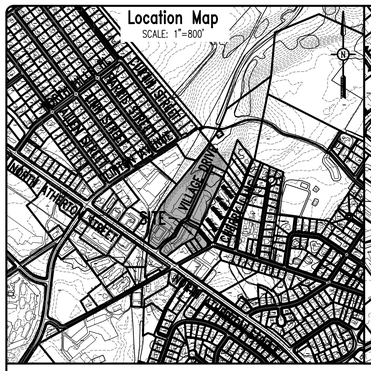

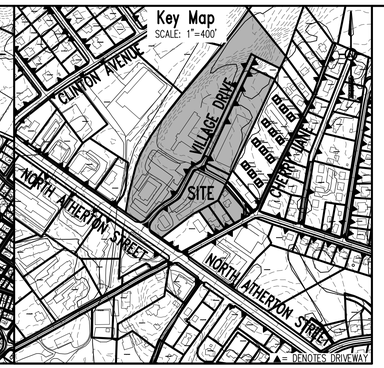

Act 287 Information: Serial # 20170591943

a. Sanitary Sewer: University Area Joint Authority, 1576 Spring Valley Road, State College, PA 16801, (814) 238-5361

b. Public Water: State College Borough Water Authority, 1201 West Branch Road, State College, PA 16801, (814) 238-6766

c. Natural Gas: Columbia Gas of Pennsylvania, 2550 Carolean Industrial Drive, State College, PA 16801, (814) 238-6775

d. Electric: West Penn Power Company, 2800 East College Avenue, State College, PA 16801, (814) 237-5721

e. Telephone: Verizon, 224 South Allen Street, State College, PA 16801, (814) 231-6511

f. Cable Television: Comcast, 60 Decibel Road, State College, PA 16801, (800) 992-3515

g. Stormwater: Ferguson Township, 3147 Research Drive, State College, PA 16801, (814) 238-4651 — PA DOT, 70 PennDot Drive, Clearfield, PA 16830, (814) 765-0400

RE-STRIPING OF STALLS EXHIBIT

* PARKING STALLS BEHIND SLEEP INN WILL BE RE-STRIPED TO SHOW TWELVE COUNT, INSTEAD OF NINE COUNT.

SCALE: 1"=30'

EXISTING CURVE TABLE

CURVE	LENGTH	RADIUS	TANGENT	CHORD DIRECTION	CHORD	DELTA
C1	481.98'	928.46'	246.55'	N 24° 31' 33" E	476.58'	29° 44' 36"
C2	177.31'	1472.48'	88.76'	N 35° 56' 51" E	177.21'	06° 53' 58"

SURVEY FEATURES LEGEND

- Property Line, Lot Line or Right of Way Line
- Adjoining Property Line
- Building Setback Line
- Easement Line
- Roadway Center Line
- I.P. Found

EXISTING FEATURES LEGEND

- Existing Building
- Existing Curbing
- Existing Contours (10's)
- Existing Soil Limit Line / Boundary
- Existing Soil Type
- Existing Tree Line
- Existing Overhead Utility Line w/ Pole
- Existing 6" & 8" PVC Sanitary Sewer w/ Manhole
- Existing 4", 6" & 8" D.I.P. Water Line w/ Valve
- Existing 2" & 4" Plastic & D.I.P. Gas Line
- Existing Underground Electric
- Existing 6" PVC & 12" PVC, 12", 15", 18" CMP Storm Sewer w/ Inlet
- Existing Concrete Areas
- Existing Gravel Areas
- Existing Retaining Wall
- Existing Vinyl/Wooden Fence
- Existing Fire Hydrant
- Existing Manhole
- Existing Utility Pole
- Existing Light Pole/Standard
- Existing Light Pole (Single Fixture)
- Existing Sign
- Existing Mail Box
- Existing Deciduous Tree
- Existing Evergreen Tree
- Existing Shrub
- 25% Slopes Or Greater
- Flood Plain

PROPOSED FEATURES LEGEND

- PROPOSED BUILDING
- PROPOSED CURBING
- PROPOSED CURB TRANSITIONS
- PROPOSED TREE LINE
- PROPOSED CONCRETE SIDEWALK
- PROPOSED CONCRETE AREAS
- PROPOSED PAVED AREAS (EXCEPT WALK/BIKE PATH)
- PROPOSED VINYL FENCE
- PROPOSED WOODEN FENCE
- PROPOSED RETAINING WALL
- PROPOSED MANHOLE
- PROPOSED STORM SEWER INLET – TYPE M
- PROPOSED STORM SEWER INLET – TYPE C
- PROPOSED GAS VALVE
- PROPOSED CLEAN-OUT W/ CONC. PAD
- PROPOSED LIGHT POLE/STANDARD
- PROPOSED LIGHT (WALL MOUNT)
- PROPOSED SIGN
- PROPOSED PARKING STALL COUNT
- PROPOSED TRAFFIC FLOW ARROWS
- PROPOSED PAINTED HANDICAPPED PARKING SYMBOL
- PROPOSED PAINTED HANDICAPPED PARKING SYMBOL (VAN)
- PROPOSED DEPRESSED CURB AREA
- PROPOSED PAINTED SITE CROSSWALK (ACCESSIBLE ROUTE)
- PROPOSED HANDICAPPED RAMP

SOILS LEGEND

Soil cover on the site consists of:

HaB – Hagerstown Silt Loam, 3%–8% Slopes
No – Nolin Silt Loam, Local Alluvium, 0%–5% Slopes
OhB – Opequon–Hagerstown Complex, 3%–8% Slopes
OhC – Opequon–Hagerstown Complex, 8%–15% Slopes
OxD – Opequon–Rock Outcrop Complex, 8%–25% Slopes
URB – Urban Land–Hagerstown Complex, Gently Sloping

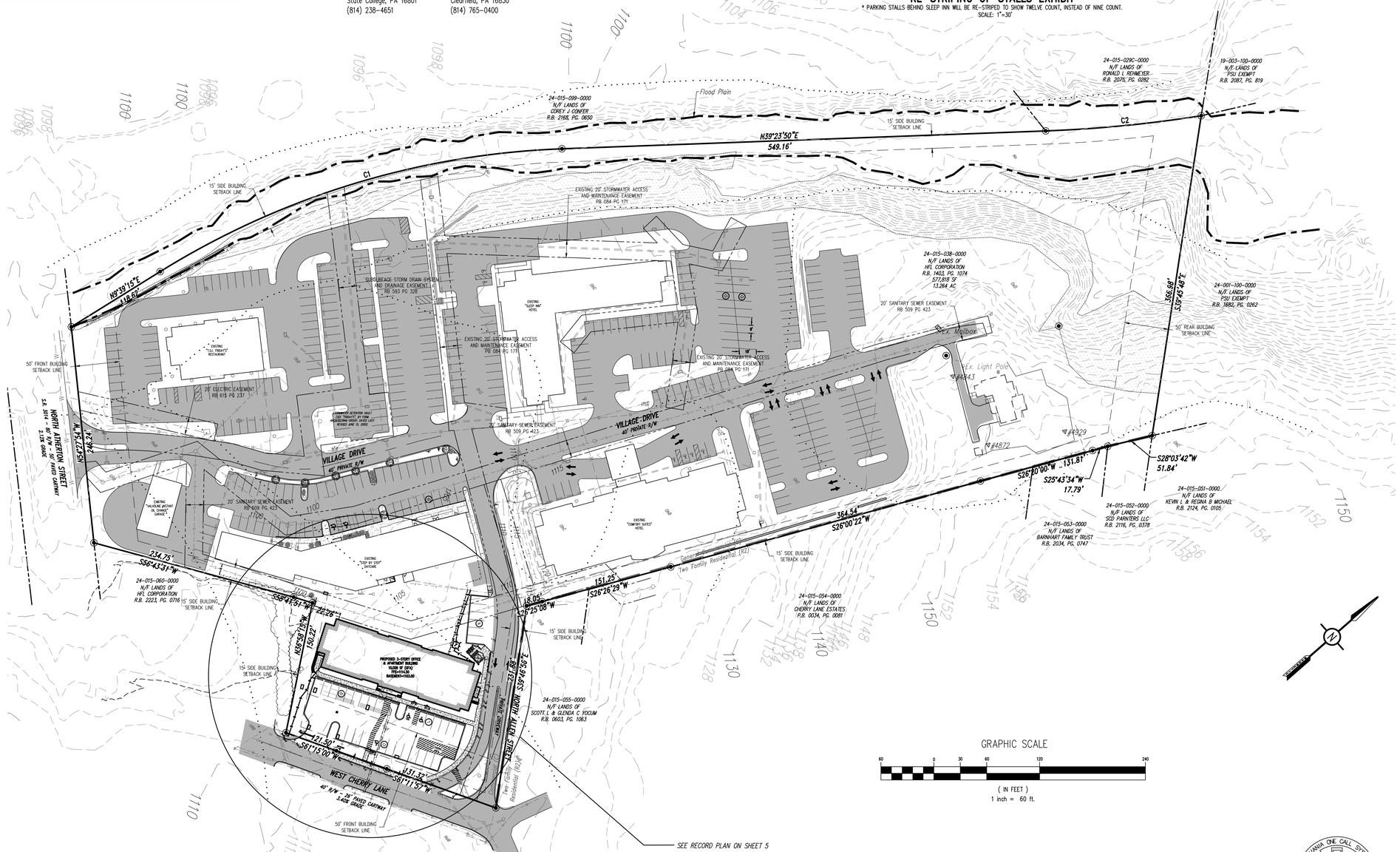

GRAPHIC SCALE

60 0 30 60 120 240

(IN FEET)
1 inch = 60 ft.

BEFORE YOU DIG ANYWHERE IN PENNSYLVANIA ! CALL 1-800-242-1776
NON-MEMBERS MUST BE CONTACTED DIRECTLY

PennTerra ENGINEERING INC.

CENTRAL PENNSYLVANIA REGION OFFICE:
3075 ENTERPRISE DRIVE
SUITE 100
STATE COLLEGE, PA 16801
PH: 814-231-8285
Fax: 814-237-2308

LANCASTER REGION OFFICE:
3904 B ABEL DRIVE
COLUMBIA, PA 17512
PH: 717-522-5031
Fax: 717-522-5046

WWW.PENNTERRA.COM

COPYRIGHT 2019 BY THE ENGINEER
THE INFORMATION CONTAINED HEREON MAY NOT BE USED OR COPIED IN ANY MANNER WITHOUT THE WRITTEN PERMISSION OF THE ENGINEER EXCEPT AS OTHERWISE PROVIDED BY APPROPRIATE LAWS OR STATUTES.
© PENNTERRA ENGINEERING 2019
ALL RIGHTS RESERVED

COMMONWEALTH OF PENNSYLVANIA — REGISTERED PROFESSIONAL — JOHN C. SEPP — ENGINEER 040003-E — Seal

COMMONWEALTH OF PENNSYLVANIA — REGISTERED PROFESSIONAL — NEVIN L. GROVE — LAND SURVEYOR No. SU061171 — Seal

Designer	RRK
Draftsman	JDB
Proj.Manager	JCS
Surveyor	----
Perimeter Ck.	
Book	---- Pg ----
Drive	Layout 16094-04-OVERAL LD PLAN
Acad	OVERALL LD PLAN – 24"X36"

Date	Description
12-3-19 MLH	REVISED PER TWP COMMENTS
11-1-19 MLH	REVISED PER TWP COMMENTS

REVISIONS

WEST CHERRY LANE MULTI USE BUILDING

FERGUSON TOWNSHIP
CENTRE COUNTY
PENNSYLVANIA

PRELIMINARY/FINAL LAND DEVELOPMENT PLAN

OVERALL LAND DEVELOPMENT PLAN

PROJECT NO.	
16094.01	
DATE	
SEPTEMBER 12, 2019	
SCALE	SHEET NO.
1"=60'	4

P:\sdtproj\2016\16094\dwg\plot files\final plans\FINAL PLANS - REVISED\16094-04-OVERAL LD PLAN.dwg, 12/4/2019 11:47:38 AM, 1:1

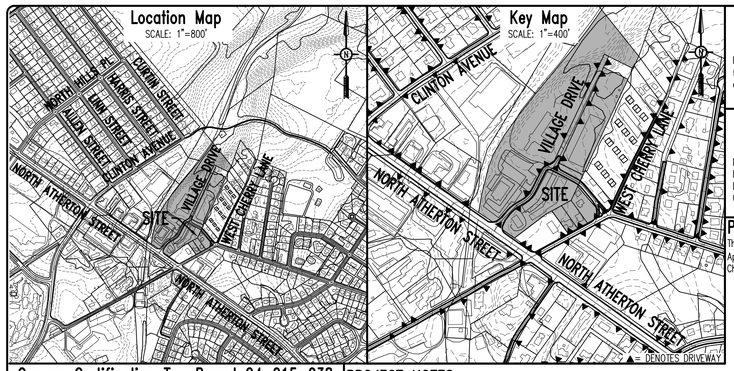

Storm Water Certification

I, _____, hereby certify that the Stormwater Management Plan meets all design standards and criteria of the Ferguson Township Stormwater Management Ordinance.

Design Engineer Certification

I, _____, hereby certify that this land development meets all design requirements of the Subdivision and Land Development Ordinance, Zoning Ordinance and all other applicable Chapters of Ferguson Township Code.

PLAN PURPOSE:

The purpose of this plan set is to obtain regulatory approval to construct a 9,954 SF (GFA) Office (first floor) and Apartments (second and third floor) with related parking, utilities, and amenities on Tax Parcel 24-015-038, along West Cherry Lane.

Owners Certification Tax Parcel 24-015-038 and Tax Parcel 24-015-60

Commonwealth of Pennsylvania
County of Centre

On this the_____day of_____, 20_____, personally appeared before me and certified that they were the owners of the properties shown on this plan and acknowledge the same to be their act and plan and designs, the same to be recorded as such, according to the law.

_____

witness my hand and seal, this date _____

_____
Notary Public Commission Expires

Storm Water Facilities Acknowledgement

I/We, _____ the landowner(s), my/our heirs and assigns, acknowledge the Stormwater Management System to be a permanent facility which can be altered or removed only after approval of a revised plan by the Ferguson Township Board of Supervisors. The stormwater management system is to be maintained in accordance with the approved ownership and maintenance program.

Township Engineer Certification

I, _____, have reviewed and hereby certify that the plan meets all engineering design standards and criteria of the Ferguson Township Code of Ordinances.

Municipal Storm Water Certification

I, _____, _____20____, have reviewed the Stormwater Management Plan in accordance with the design standards and criteria of the Ferguson Township Stormwater Management Ordinance.

Township Planning Commission

Ferguson Township Planning Commission Approved

_____
Chairman Date

_____
Secretary Date

Township Supervisors

Ferguson Township Supervisors Approved

_____
Chairman Date

_____
Secretary Date

Fire Chief Certification

I have reviewed and hereby certify that the location of Fire Lanes and Fire Hydrants shown on this plan are adequate.

_____
Fire Chief Date

Professional Land Surveyor Certification

I, Nevin L. Grove, a Professional Land Surveyor in the Commonwealth of Pennsylvania, do hereby certify that this plan correctly represents the tracts of lands as shown.

_____
Signature Date

Recorder of Deeds

PROJECT NOTES:

1. General Site Information:
   a. Owner of Record: HFL Corporation, 1155 Benner Pike Suite 100, State College, PA 16801
   b. Tax Parcel No.: Tax Parcel 24-015-038
   c. Deed Information: R.B. 1403/PG. 1074
   d. Zoning: (C) General Commercial
   e. Site Address: Office: 118 West Cherry Lane; Apartments: 114 West Cherry Lane
   f. Site Size: 13.264 Acres / 577,808 S.F.
   g. Site Use: Residential-Single Family Dwellings (Existing); Business and Professional Offices & Two Family Attached Dwellings (Proposed)
      *Allowable Number of Apartment Units = 1/3000 SF
      *Building will have no more than 67% residential floor area.
      Total Residential Floor Area = 19,714 S.F.
      Total Office Floor Area = 9,954 S.F.
      Total Basement Floor Area = 10,008 S.F.
      Total Building Floor Area = 39,676 S.F.
      Total Residential Floor Area is 49.7% of the total Building Area.
   h. Building Setbacks: 50' (Front) 15' (Side) 50' (Rear)
   i. Building Height: 45' Max. (Allowable) / 45' (Proposed)
2. Impervious Areas:
   a. Existing: 57,491 S.F. (9.95%) (Building); 217,854 S.F. (37.70%) (Parking/Driveways/Walks); 275,345 S.F. (47.65%) (Total)
   b. Proposed: 63,604 S.F. (11.00%) (Building); 229,617 S.F. (39.73%) (Parking/Driveways/Walks); 293,221 S.F. (50.75%) (Total)
   c. Max. Allowable: 80% (Total) 30% (Building)
3. Parking Calculations:
   a. A variance was granted by Ferguson Township Zoning Hearing Board on July 17, 2018, which reduced the required parking for the basement area.
   b. Required (For Proposed):
      Total Required – 1 space per 250 GFA (Proposed Business, Professional and Financial Offices)
      Total Required – 1.5 spaces per dwelling unit (Proposed Two Family Attached Dwelling)
      Total Required – 1 per bedroom for every bedroom use (Proposed Overflow Parking)
   c. Required (For Existing):
      Total Required – 1 space per 350 GFA (Existing "Step By Step" Daycare)
      Total Required – 1.2 spaces per room (Existing "Sleep Inn" Hotel)
      Total Required – 1.2 spaces per room (Existing "Comfort Suites" Hotel)
      Total Required – 1 space per 250 GFA (Existing "Valvoline Instant Oil Changes" Office)
      Total Required – 6 spaces per bay (Existing "Valvoline Instant Oil Changes" Garage Bays)
      Total Required – 1.2 spaces per 50 GFA (Existing "TGI FRIDAYS" Restaurant)
      Total Required – 1.2 spaces per 100 GFA (Existing "TGI FRIDAYS" Take Out)
      Total Required – 2 spaces per dwelling unit (Former Tax parcel 24-015-047)
   d. Business, Professional and Financial Offices: 9,954 S.F. at 1/250 S.F. = 40 spaces
      Two Family Attached Dwelling: 18 Dwelling Units at 1.5/Unit = 27 spaces
      Overflow Parking: Additional bedrooms per unit over 1 Bedroom at 1 space/Bedroom = 18 spaces
      (A total of 18 bedrooms are proposed over the the 1 bedroom per unit.)
      Basement: 3,500 S.F. at 1/250 S.F. = 14 spaces (See Note 3.a and Plan Sheet A1)
      Daycare: 12,435 S.F. at 1/350 S.F. = 36 spaces
      Sleep Inn: 102 rooms at 1.2/room = 122 spaces
      Comfort Suites: 77 rooms at 1.2/room = 92 spaces
      Valvoline Instant Oil Change Office: 432 S.F. at 1/250 S.F. = 2 spaces
      Valvoline Instant Oil Change Garage Bays: 3 service bays at 6/bay = 18 spaces
      TGI Fridays Restaurant: 3,591 S.F. at 1/50 S.F. = 72 spaces
      TGI Fridays Take Out: 204 S.F. at 1/100 S.F. = 2 spaces
      Former Tax parcel 24-015-047: 2 spaces per dwelling unit = 2 spaces
      TOTAL REQUIRED PARKING SPACES = 445 SPACES
   e. Provided: Proposed 445 spaces total
4. ACT 287 Utility Information: (Serial No. 20170591943)
   All utility locations should be verified prior to any construction, utility information and locations should be considered approximate. Contractor shall notify PA One Call prior to any excavation.
   a. Sanitary Sewer — University Area Joint Authority, 1576 Spring Valley Road, State College, PA 16801 – Phone: 814-238-5361
   b. Public Water — State College Borough Water Authority, 1201 West Branch Road, State College, PA 16801 – Phone: 814-238-6766
   c. Natural Gas — Columbia Gas of Pennsylvania, 2550 Corolean Industrial Drive, State College, PA 16801 – Phone: 814-238-6775
   d. Electric — West Penn Power Company, 2800 E. College Ave., State College, PA 16801 – Phone: 814-237-5721
   e. Telephone — Verizon, 224 South Allen Street, State College, PA 16801 – Phone: 814-231-6511
   f. Cable Television — Comcast, 60 Decibel Road, State College, PA 16801 – Phone: 800-992-3515
   g. Stormwater — Ferguson Township, 3147 Research Drive, State College, PA 16801 – Phone: 814-238-4651; PA DOT, 70 PennDot Drive, Clearfield, PA 16830 – Phone: 814-765-0400
5. For additional information, refer to:
   a. "College Village Center Minor Alteration Plan", dated February 1, 2017, prepared by PennTerra Engineering, Inc., and on record at the Ferguson Township Municipal Building.
   b. "Lot Consolidation of Tax Parcel 24-015-058, Tax Parcel 24-015-057 & Tax Parcel 24-015-038 Plan", dated September 12, 2019, prepared by PennTerra Engineering, Inc.
6. Refer to Architectural Plans for building dimensions, utility relocations, extensions and connections.
7. The project benchmark is the top of casting (TC=1117.96) of the existing sanitary manhole, located at the intersection of West Cherry Lane and North Allen Street.
8. Contours shown were generated from a field survey, on August 8th, 2016, by PennTerra Engineering, Inc. based on USGS datum.
9. There are no wetlands within the area of work, according to the National Wetland Inventory Mapping (NWI) from Julian, PA documented in 1988.
10. There is no floodplain within the area of work, according to the Federal Emergency Management Agency (FEMA) map for Ferguson Township, Centre County – Map No. 42027C0617F, Community No. 420260, 0617F, dated May 4, 2009.
11. Based on field survey by PennTerra Engineering Inc, there are no visible sinkholes or areas of closed depressions within the area of work.
12. Soil limits and descriptions have been taken from the Web Soil Survey.
13. From USGS contour mapping and field survey, significant areas of steep slopes (greater than 25% slope) are not present in work area.
14. This Record Plan conforms with the Plan receiving final approval by the Ferguson Township Board of Supervisors on _____ _____, 20_____. All improvements are or will be installed in accordance with such Plan in a manner and time so specified therein.
15. As-Built drawings/documentation (including verification of infiltration testing) of the stormwater management facilities must be prepared in accordance with Chapter 26 (§26-402.D.4.) and submitted to Ferguson Township at the completion of construction as a prerequisite of issuance of Occupancy Permit or release of the Surety Bond. A narrative and photographic documentation for critical stages of construction and for the infiltration surface prior to placement of filter fabric/amended soils must also be submitted to Ferguson Township.
16. Ferguson Township personnel shall have the uninterrupted right to access the property to inspect and maintain the stormwater facilities in the event that the owner does not comply with the Ferguson Township requirements.
17. All parking lots and buffer yards shall be kept free of litter and trash.
18. All maintenance, repair and replacement of landscaping materials and screening fences are the responsibility of the property owner.
    The following criteria associated with such maintenance includes:
    a. Any plant material that is 25% or more dead must be replaced
    b. Replacements must be made during the first spring or fall planting season following the death of the plant(s)
    c. Replacements shall be of the same size and type of plant as indicated on the approved plan
19. Any drilling or blasting required for the construction of the site is to be thoroughly coordinated with Ferguson Township and the SCBWA to determine if any impacts to existing rock or the formation of sinkholes may occur as a direct result of the blasting activities. The following performance and monitoring protocols should be followed:
    a. All blasting shall be monitored in the field by a Professional Geologist or Professional Engineer currently licensed to practice in the Commonwealth of Pennsylvania.
    b. Before any blasting is performed, the Professional Geologist of Professional Engineer shall submit a report containing specific recommendations for blasting. The report shall review amount of charge, firing times, ground velocities, accelerations and displacements, effects on groundwater aquifer system and field monitoring program. Should the report conclude that damage to the aquifer system will result from the blasting operation, the Contractor will not be permitted to drill or blast.
    c. All blasting shall be field monitored using seismographic type equipment and shall be performed under the supervision of a Professional Geologist or Professional Engineer.
    d. Accurate records shall be maintained of each blast. The record shall show the general location of the blast, the depth and number of drill holes, the kind and quantity of explosives used, ground velocity and displacements, and other data required for a complete record. A complete record of drilling and blasting operations shall be provided to Ferguson Township and SCBWA for review.
    e. All operations involving explosives shall be conducted by experienced personnel possessing valid Pennsylvania Blaster's Licenses. Blasting operations shall be done only with such quantities and charges of explosives and in a manner that will break the rock at the intended lines and grades and will leave remaining rock in an un-shattered condition. Remedial measures, as reviewed and approved by SCBWA, shall be provided if excessive subsurface fracturing results.
    f. The Developer will reimburse associated costs and expenses for all construction phase services to SCBWA & Ferguson Township.
    g. Upon agreement by and between the Developer, Ferguson Township and SCBWA, the procedures and standards as listed above may be modified or revised as deemed appropriate by SCBWA.
20. A zoning permit application was submitted to Ferguson Township, dated September 12, 2019.
21. "Loading Area" to be used before or after office hours only.
22. Fee in lieu of parkland is required for all proposed mixed use dwelling units and shall be assessed as a condition of plan approval. No more than 18 dwelling units may be constructed on the land, which is the subject of this subdivision/land development plan unless additional land is dedicated to the Township of Ferguson for parkland and open spaces and/or the Board of Supervisors accepts additional fee-in-lieu of dedication of parkland and open spaces: said decision to be at the discretion of the Board of Supervisors.
23. A Stormwater Management Site Plan/PCSM Plan and Soil Erosion & Sedimentation Control Plan have been prepared for West Cherry Lane Multi-Use Building, dated September 12, 2019 and last revised November 1, 2019.
24. A preconstruction meeting between the township engineer, owner and owner's contractor is required prior to construction.
25. Approval of this plan including permission from the owner of Tax Parcel 24-15-60 to grade on the lot. The owner of Tax Parcel 24-15-60 has signed the Owner's Certificate acknowledge the work.

STORMWATER MANAGEMENT FACILITIES OWNERSHIP AND MAINTENANCE PROGRAM:

STORMWATER BMP MAINTENANCE ITEM	MAINTENANCE DUTY	OCCURRENCE INTERVAL
STORM SEWER INLETS AND PIPES	INSPECT ALL STORM SEWER INLETS AND PIPES. THE INLETS SHALL BE CLEANED OF ALL DEBRIS, LITER, AND OTHER DELETERIOUS MATERIAL. FLEX STORM INLET FILTERS SHALL BE INSTALLED ON INLETS 1, 2 AND 5. SEE MAINTENANCE SCHEDULE BELOW FOR FLEX STORM FILTERS.	MONTHLY OR AFTER EACH RAINFALL EVENT PRODUCING 1" OR MORE OF RAINFALL
48" UNDERGROUND DETENTION BASIN	THE BASIN SHALL BE INSPECTED AND CLEANED OF ALL DEBRIS, LITER, AND OTHER DELETERIOUS MATERIAL.	ANNUALLY OR AFTER EACH RAINFALL EVENT PRODUCING 1" OR MORE OF RAINFALL
BASIN OUTLET STUCTURES	THE OUTLET STRUCTURES SHALL BE INSPECTED TO ENSURE STRUCTURAL STABILITY. ALL JOINTS WITH OUTLET PIPES SHALL BE WATER-TIGHT AND IF NECESSARY RE-GROUTED.	ANNUALLY
SINKHOLE PREVENTION MEASURES	INSPECT THE UNDERGROUND SUMP AND BASIN AREA FOR ANY SUBSIDENCE. IN THE EVENT THAT A SINKHOLE FORMS, CONTACT THE TOWNSHIP ENGINEER, ANY ADJACENT PROPERTY OWNER THAT MAY BE AFFECTED AND THE STATE COLLEGE BOROUGH WATER AUTHORITY IMMEDIATELY.	ANNUALLY OR AFTER EACH RAINFALL EVENT PRODUCING 1" OR MORE OF RAINFALL
INFILTRATION SUMP	THE SUMP DISTRIBUTION LINE SHALL BE INSPECTED VIA INLETS 1-3 AND 1-2 AND VACUUMED AT LEAST TWICE A YEAR IN THE SPRING AND FALL. THE SUMP SHALL BE INSPECTED THROUGH THE OBSERVATION PORTS TO ENSURE DEWATERING. THE GATE VALVE IN 1-5 SHALL BE EXERCISED ANNUALLY TO ENSURE PROPER FUNCTION. ENSURE THE VALVE IS CLOSED FOR PROPER STORMWATER CAPTURE IN THE SUMP.	ANNUALLY OR AFTER EACH RAINFALL EVENT PRODUCING 1" OR MORE OF RAINFALL. OR AS NOTED IN THE MAINTENANCE DUTY
FLEX STORM PURE INLET FILTERS	A. INSPECT INLETS 1, 2 AND 5 TO VERIFY PLACEMENT OF FILTER. B. EMPTY THE SEDIMENT BAG IF MORE THAN HALF FILLED WITH SEDIMENT AND DEBRIS. B. REMOVE THE GRATE, ENGAGE THE LIFTING BARS OR HANDLES WITH THE FLEXSTORM REMOVAL TOOL, AND LIFT FROM THE DRAINAGE STRUCTURE. C. REMOVE THE GRATE, ENGAGE THE LIFTING BARS OR HANDLES WITH THE FLEXSTORM REMOVAL TOOL, AND LIFT FROM THE DRAINAGE STRUCTURE. D. DISPOSE OF THE SEDIMENT OR DEBRIS IN ACCORDANCE WITH EPA GUIDELINES. E. AS AN ALTERNATIVE, AN INDUSTRIAL VACUUM MAY BE USED TO COLLECT THE ACCUMULATED SEDIMENT. F. REMOVE ANY CAKED ON SILT FROM THE SEDIMENT BAG AND REVERSE FLUSH THE BAG WITH MEDIUM SPRAY FOR OPTIMAL FILTRATION. G. REPLACE THE BAG IF TORN OR PUNCTURED TO 5" DIAMETER OR GREATER ON THE LOWER HALF OF THE BAG. H. POST CONSTRUCTION PC BAGS MAINT: AT 50% SATURATION, THE AVERAGE 2' X 2' ADSORB-IT LINED PC FILTER WILL RETAIN APPROXIMATELY 75 OZ (4.2 LBS) OF OIL AND SHOULD BE SERVICED. IT CAN BE CENTRIFUGED OR PASSED THROUGH A WRINGER TO RECOVER THE OILS, AND THE FABRIC REUSED WITH 85% TO 90% EFFICACY. IT MAY ALSO BE RECYCLED FOR ITS FUEL VALUE THROUGH WASTE TO ENERGY INCINERATION.	BI-ANNUALLY OR AFTER EACH RAINFALL EVENT PRODUCING 1" OR MORE OF RAINFALL
EXISTING SITE STORMWATER MANAGEMENT FACILITIES	ALL EXISTING STORMWATER MANAGEMENT FACILITES CONSTRUCTED PRIOR TO THIS PLAN SHALL BE MAINTAINED IN ACCORDANCE WITH THE STORMWATER FACILITIES MAINTENANCE PROGRAM INCLUDED WITH THE PRIOR ASSOCIATED APPROVED AND RECORDED PLANS.	AS NOTED IN THE MAINTENACE DUTY

*DOCUMENTATION OF INSPECTIONS MUST BE MAINTAINED BY THE OWNER AND SUBMITTED TO TOWNSHIP UPON REQUEST. MAINTENANCE INSPECTIONS MAY BE PERFORMED BY THE TOWNSHIP TO ENSURE PROPER FUNCTIONING OF ALL STORMWATER FACILITIES.

SURVEY FEATURES LEGEND

- Property Line, Lot Line or Right of Way Line
- Adjoining Property Line
- Building Setback Line
- Easement Line
- Roadway Center Line
- I.P. Found

SOILS LEGEND

Soil cover on the site consists of:
HaB – Hagerstown Silt Loam, 3%-8% Slopes
No – Nolin Silt Loam, Local Alluvium, 0%-5% Slopes
OhB – Opequon-Hagerstown Complex, 3%-8% Slopes
OhC – Opequon-Hagerstown Complex, 8%-15% Slopes
OaD – Opequon-Rock Outcrop Complex, 8%-25% Slopes
UHB – Urban Land-Hagerstown Complex, Gently Sloping

EXISTING FEATURES LEGEND

- Existing Building
- Existing Curbing
- Existing Contours (10's)
- Existing Soil Limit Line / Boundary
- Existing Soil Type
- Existing Tree Line
- Existing Overhead Utility Line w/ Pole
- Existing 6" & 8" PVC Sanitary Sewer w/ Manhole
- Existing 4", 6" & 8" D.I.P. Water Line w/ Valve
- Existing 2" & 4" Plastic & D.I.P. Gas Line
- Existing Underground Electric
- Existing 6" PVC & 12" PVC, 12", 15", 18" CMP Storm Sewer w/ Inlet
- Existing Concrete Areas
- Existing Gravel Areas
- Existing Retaining Wall
- Existing Vinyl/Wooden Fence
- Existing Fire Hydrant
- Existing Manhole
- Existing Utility Pole
- Existing Light Pole/Standard
- Existing Light Pole (Single Fixture)
- Existing Sign
- Existing Mail Box
- Existing Deciduous Tree
- Existing Evergreen Tree
- Existing Shrub
- 25ft Slopes Or Greater
- Flood Plain

PROPOSED FEATURES LEGEND

- PROPOSED BUILDING
- PROPOSED CURBING
- PROPOSED CURB TRANSITIONS
- PROPOSED TREE LINE
- PROPOSED 8" SANITARY SEWER W/ MANHOLE & FLOW ARROWS
- PROPOSED 6" PVC SANITARY SEWER LATERAL W/ CLEAN OUT
- PROPOSED 4" DUCTILE IRON FIRE LINE W/ VALVE
- PROPOSED 3" DUCTILE IRON WATER SERVICE LATERAL W/ VALVE
- PROPOSED ROOF DRAIN LINE
- PROPOSED UNDERGROUND ELECTRIC
- PROPOSED UNDERGROUND TELEPHONE
- PROPOSED CONCRETE SIDEWALK
- PROPOSED CONCRETE AREAS
- PROPOSED PAVED AREAS (EXCEPT WALK/BIKE PATH)
- PROPOSED VINYL FENCE
- PROPOSED WOODEN FENCE
- PROPOSED RETAINING WALL
- PROPOSED MANHOLE
- PROPOSED STORM SEWER INLET – TYPE M
- PROPOSED STORM SEWER INLET – TYPE C
- PROPOSED GAS VALVE
- PROPOSED CLEAN-OUT W/ CONC. PAD
- PROPOSED LIGHT POLE/STANDARD
- PROPOSED LIGHT (WALL MOUNT)
- PROPOSED SIGN
- PROPOSED PARKING STALL COUNT
- PROPOSED TRAFFIC FLOW ARROWS
- PROPOSED PAINTED HANDICAPPED PARKING SYMBOL
- PROPOSED PAINTED HANDICAPPED PARKING SYMBOL (VAN)
- PROPOSED DEPRESSED CURB AREA
- PROPOSED PAINTED SITE CROSSWALK (ACCESSIBLE ROUTE)
- PROPOSED HANDICAPPED RAMP

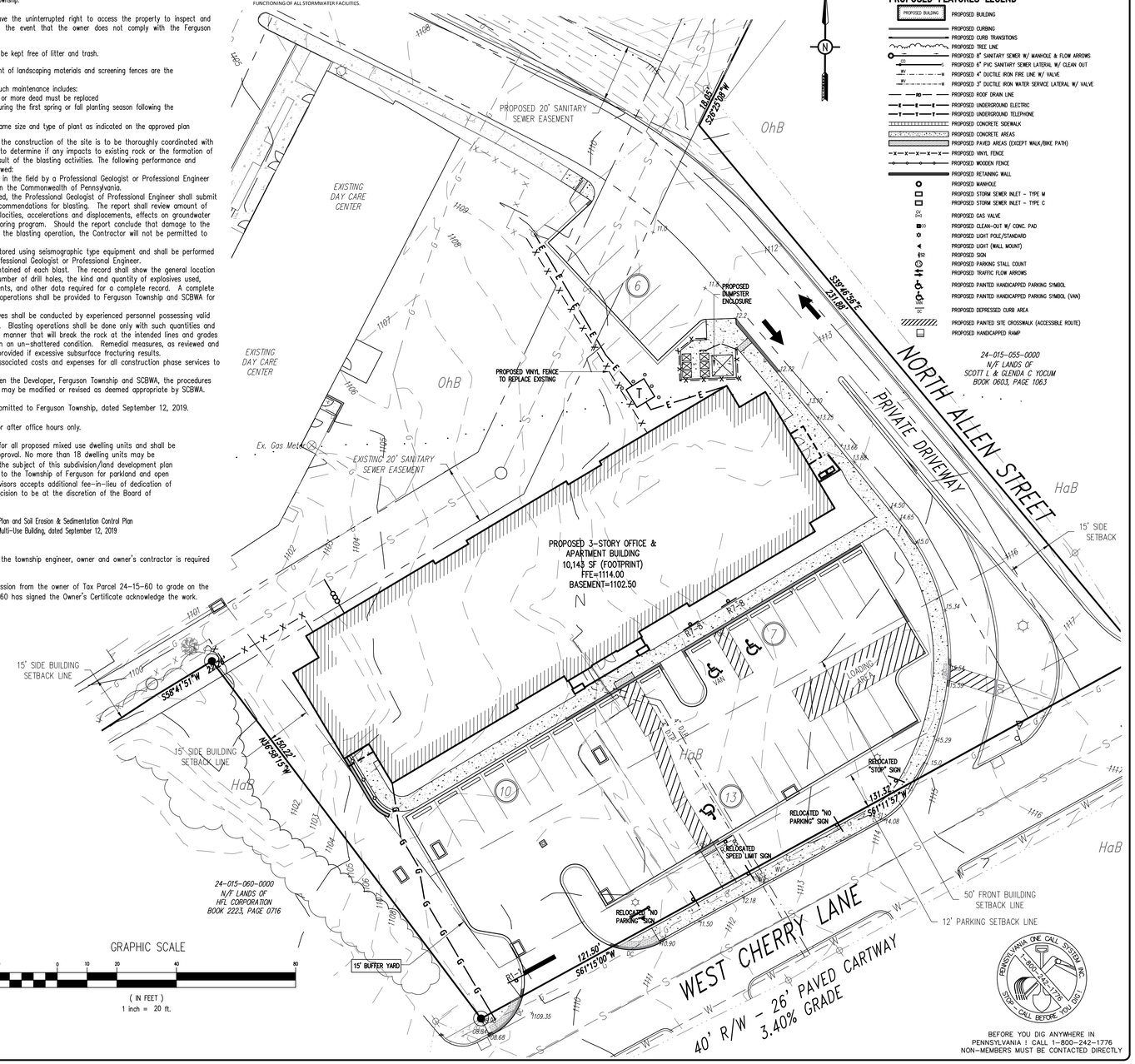

BEFORE YOU DIG ANYWHERE IN PENNSYLVANIA ! CALL 1-800-242-1776 NON-MEMBERS MUST BE CONTACTED DIRECTLY

PennTerra ENGINEERING INC.
CENTRAL PENNSYLVANIA REGION OFFICE:
3075 ENTERPRISE DRIVE
SUITE 100
STATE COLLEGE, PA 16801
PH: 814-231-8285
Fax: 814-237-2308
LANCASTER REGION OFFICE:
3904 B ABEL DRIVE
COLUMBIA, PA 17512
PH: 717-522-5031
Fax: 717-522-5046
WWW.PENNTERRA.COM

COPYRIGHT 2019 BY THE ENGINEER
THE INFORMATION CONTAINED HEREON MAY NOT BE USED OR COPIED IN ANY MANNER WITHOUT THE WRITTEN PERMISSION OF THE ENGINEER EXCEPT AS OTHERWISE PROVIDED BY APPROPRIATE LAWS OR STATUTES.
© PENNTERRA ENGINEERING 2019 ALL RIGHTS RESERVED

COMMONWEALTH OF PENNSYLVANIA REGISTERED PROFESSIONAL JOHN C. SEPP ENGINEER 040003-E Seal

COMMONWEALTH OF PENNSYLVANIA REGISTERED PROFESSIONAL NEVIN L. GROVE LAND SURVEYOR No. SU061171 Seal

Designer: RRK
Draftsman: JDB
Proj.Manager: JCS
Surveyor: ----
Perimeter Ck.:
Book: ---- Pg: ----
Drive: Layout: 16094-05-RP
Acad: RECORD PLAN-24'X36'

Date	Description
12-3-19 MLH	REVISED PER TWP COMMENTS
11-1-19 MLH	REVISED PER TWP COMMENTS

REVISIONS

WEST CHERRY LANE MULTI USE BUILDING

FERGUSON TOWNSHIP
CENTRE COUNTY
PENNSYLVANIA

PRELIMINARY/FINAL LAND DEVELOPMENT PLAN

RECORD PLAN

PROJECT NO. 16094.01
DATE: SEPTEMBER 12, 2019
SCALE: 1"=20'
SHEET NO. 5

P:\ldsproj\2016\16094\dwg\plot files\final plans\FINAL PLANS - REVISED\16094-05-RP.dwg, 12/4/2019 11:48:08 AM, 1:1

CONSTRUCTION NOTES:

1. FIELD SURVEY DATA PREPARED BY PENNTERRA ENGINEERING, INC. CONTRACTOR SHALL FIELD VERIFY ALL INFORMATION AND CONTACT THE SITE OWNER OR OWNER'S REPRESENTATIVE IN THE EVENT OF A DISCREPANCY.
2. CONTOURS (ON APPLICABLE SHEETS) SHOWN WERE GENERATED FROM A FIELD SURVEY BY PENNTERRA ENGINEERING, INC. BASED ON USGS DATUM (NAD83/NAVD88). THE PROJECT BENCHMARK IS THE TOP OF CASTING (TC=1117.96) OF THE EXISTING SANITARY MANHOLE, LOCATED AT THE INTERSECTION OF WEST CHERRY LANE AND NORTH ALLEN STREET.
3. THE CONTRACTOR SHALL VERIFY THE LOCATION OF MANHOLES, INLETS VALVES, ETC. CONTRACTOR SHALL TEST PIT EXISTING UTILITIES AS DEEMED NECESSARY WITHIN THE LIMITS OF CONSTRUCTION TO DETERMINE THE EXACT LOCATION AND DEPTH AS REQUIRED. ALL EXISTING UTILITIES SHALL BE RETAINED UNLESS MARKED OTHERWISE, AND APPURTENANCES SHALL BE ADJUSTED TO FINAL GRADE. DAMAGE TO EXISTING CONDITIONS AND UTILITIES TO REMAIN SHALL BE REPAIRED AS REQUIRED TO THE OWNER'S SATISFACTION AT THE EXPENSE OF THE CONTRACTOR.
4. ALL AREAS DISTURBED DURING CONSTRUCTION, NOT DESIGNATED TO RECEIVE PAVING OR MULCH SHALL BE FINE GRADED, TOPSOILED, & SEEDED PER THE SPECIFICATIONS UNLESS OTHERWISE NOTED IN THE CONSTRUCTION DRAWINGS, SITE SPECIFICATIONS OR INSTRUCTED BY THE OWNER.
5. THE CONTRACTOR SHALL REPAIR OR REPLACE ALL PAVEMENT, UTILITIES, ETC., WITHIN THE SITE DAMAGED DURING CONSTRUCTION THAT ARE NOT INDICATED TO BE REMOVED. ALL REPAIRS OR REPLACEMENTS ARE AT THE CONTRACTOR'S EXPENSE.
6. THE CONTRACTOR SHALL BE RESPONSIBLE FOR COORDINATION WITH UTILITY COMPANIES ON LOCATION/REMOVAL AND/OR REPLACEMENT OF ELECTRICAL, PHONE, GAS, SANITARY, WATER AND CABLE SERVICES.
7. THE CONTRACTOR SHALL VERIFY ELEVATIONS OF EXISTING PAVING AT NEW PAVING CONNECTION LOCATIONS PRIOR TO THE PAVING SUBBASE INSTALLATION AND REPORT ANY DISCREPANCIES THAT WILL AFFECT THE DRAINAGE OF THE AREAS TO THE OWNER'S REPRESENTATIVE.
8. THE CONTRACTOR SHALL NOTIFY OWNER'S TESTING AGENCY PRIOR TO ANY PLACEMENT AND COMPACTION OF FILLS ON THE SITE. FILL AREAS SHALL BE PREPARED AND COMPACTED PER THE PROJECT SPECIFICATIONS AND CERTIFIED BY THE OWNER'S TESTING AGENCY. CONTRACTOR SHALL BE RESPONSIBLE FOR REMOVAL, RETESTING, AND REPLACEMENT OF FILLS NOT MEETING THE SPECIFICATIONS. CONTRACTORS IS ALSO RESPONSIBLE FOR ALL EXPENSES ASSOCIATED WITH REPLACEMENT OF FILLS NOT MEETING THE SPECIFICATIONS.
9. THE CONTRACTOR SHALL MAINTAIN ONE SET OF CONTRACT DOCUMENTS ON SITE TO BE UTILIZED FOR RECORD DOCUMENTS. FIELD RECORDS OF THE DEPTH AND LOCATIONS OF ALL UNDERGROUND SERVICE UTILITIES (WATER, SANITARY SEWER, STORM DRAINS, PRIMARY AND SECONDARY ELECTRIC, GAS, AND CABLE TELEVISION) SHALL BE ADDED TO THE RECORD SET BY THE CONTRACTOR AS WELL AS ALL FIELD REVISIONS AND ADJUSTMENTS.
10. THE CONTRACTOR SHALL CONTACT PA ONE CALL SYSTEM @ 1-800-242-1776 AT LEAST THREE (3) DAYS PRIOR TO CONSTRUCTION ACTIVITIES.
11. ALL FILL MATERIAL BROUGHT ON TO THE JOB BY THE CONTRACTOR MUST COMPLY WITH ALL APPLICABLE D.E.P. REGULATIONS REGARDING CLEAN FILL.
12. THE CONTRACTOR SHALL REFER TO THE ARCHITECTURAL PLANS FOR THE EXACT LOCATION OF UTILITY ENTRANCES, BUILDING DIMENSIONS, ROOF LEADERS EXIT DOORS, EXIT RAMPS AND PORCHES. ALL SITE WORK SHALL BE DONE IN ACCORDANCE WITH THE PLANS PREPARED BY PENNTERRA ENGINEERING, THE CURRENT REGULATIONS OF FERGUSON TOWNSHIP, AND ALL OTHER PERTINENT FEDERAL, STATE & LOCAL LAWS.
13. THE CONTRACTOR SHALL COMPLY AT ALL TIMES WITH APPLICABLE FEDERAL, STATE AND LOCAL LAWS, PROVISIONS, AND POLICIES GOVERNING SAFETY AND HEALTH, INCLUDING THE FEDERAL CONSTRUCTION SAFETY ACT (PUBLIC LAW 91-54), FEDERAL REGISTER, CHAPTER XVII, PART 1926 OF TITLE 29 REGULATIONS, OCCUPATIONAL SAFETY AND HEALTH REGULATIONS FOR CONSTRUCTION, AND SUBSEQUENT PUBLICATIONS UPDATING THESE REGULATIONS.

GEOMETRY PLAN NOTES:

1. ALL PERPENDICULAR PARKING STALLS ARE 9 FEET WIDE AND 18 FEET LONG.
2. ALL AISLE WAYS BETWEEN PERPENDICULAR PARKING STALLS ARE 24 FEET WIDE.

SURVEY FEATURES LEGEND

- Property Line, Lot Line or Right of Way Line
- Adjoining Property Line
- Building Setback Line
- Easement Line
- Roadway Center Line
- I.P. Found

EXISTING FEATURES LEGEND

- Existing Building
- Existing Curbing
- Existing Contours (10's)
- Existing Soil Limit Line / Boundary
- Existing Soil Type
- Existing Tree Line
- Existing Overhead Utility Line w/ Pole
- Existing 6" & 8" PVC Sanitary Sewer w/ Manhole
- Existing 4", 6" & 8" D.I.P. Water Line w/ Valve
- Existing 2" & 4" Plastic & D.I.P. Gas Line
- Existing Underground Electric
- Existing 6" PVC & 12" PVC, 12", 15", 18" CMP Storm Sewer w/ Inlet
- Existing Concrete Areas
- Existing Gravel Areas
- Existing Retaining Wall
- Existing Vinyl/Wooden Fence
- Existing Fire Hydrant
- Existing Manhole
- Existing Utility Pole
- Existing Light Pole/Standard
- Existing Light Pole (Single Fixture)
- Existing Sign
- Existing Mail Box
- Existing Deciduous Tree
- Existing Evergreen Tree
- Existing Shrub
- 25% Slopes Or Greater
- Flood Plain

SOILS LEGEND

Soil cover on the site consists of:

HaB – Hagerstown Silt Loam, 3%-8% Slopes
No – Nolin Silt Loam, Local Alluvium, 0%-5% Slopes
OhB – Opequon-Hagerstown Complex, 3%-8% Slopes
OhC – Opequon-Hagerstown Complex, 8%-15% Slopes
OxD – Opequon-Rock Outcrop Complex, 8%-25% Slopes
URB – Urban Land-Hagerstown Complex, Gently Sloping

BEFORE YOU DIG ANYWHERE IN PENNSYLVANIA ! CALL 1-800-242-1776
NON-MEMBERS MUST BE CONTACTED DIRECTLY

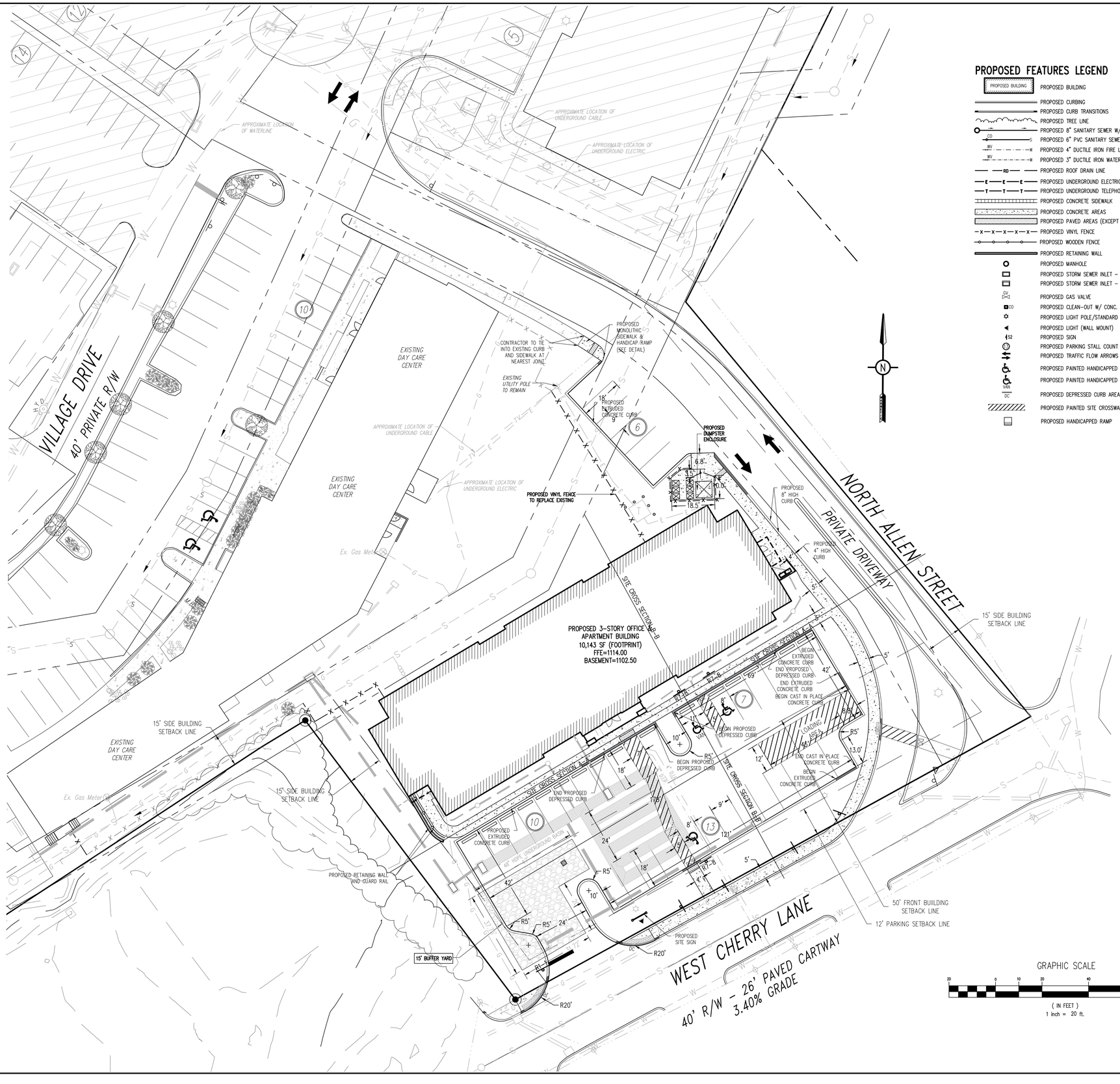

PROPOSED FEATURES LEGEND

- PROPOSED BUILDING
- PROPOSED CURBING
- PROPOSED CURB TRANSITIONS
- PROPOSED TREE LINE
- PROPOSED 8" SANITARY SEWER W/ MANHOLE & FLOW ARROWS
- PROPOSED 6" PVC SANITARY SEWER LATERAL W/ CLEAN OUT
- PROPOSED 4" DUCTILE IRON FIRE LINE W/ VALVE
- PROPOSED 3" DUCTILE IRON WATER SERVICE LATERAL W/ VALVE
- PROPOSED ROOF DRAIN LINE
- PROPOSED UNDERGROUND ELECTRIC
- PROPOSED UNDERGROUND TELEPHONE
- PROPOSED CONCRETE SIDEWALK
- PROPOSED CONCRETE AREAS
- PROPOSED PAVED AREAS (EXCEPT WALK/BIKE PATH)
- PROPOSED VINYL FENCE
- PROPOSED WOODEN FENCE
- PROPOSED RETAINING WALL
- PROPOSED MANHOLE
- PROPOSED STORM SEWER INLET – TYPE M
- PROPOSED STORM SEWER INLET – TYPE C
- PROPOSED GAS VALVE
- PROPOSED CLEAN-OUT W/ CONC. PAD
- PROPOSED LIGHT POLE/STANDARD
- PROPOSED LIGHT (WALL MOUNT)
- PROPOSED SIGN
- PROPOSED PARKING STALL COUNT
- PROPOSED TRAFFIC FLOW ARROWS
- PROPOSED PAINTED HANDICAPPED PARKING SYMBOL
- PROPOSED PAINTED HANDICAPPED PARKING SYMBOL (VAN)
- PROPOSED DEPRESSED CURB AREA
- PROPOSED PAINTED SITE CROSSWALK (ACCESSIBLE ROUTE)
- PROPOSED HANDICAPPED RAMP

PennTerra ENGINEERING INC.

CENTRAL PENNSYLVANIA REGION OFFICE:
3075 ENTERPRISE DRIVE
SUITE 100
STATE COLLEGE, PA 16801
PH: 814-231-8285
Fax: 814-237-2308

LANCASTER REGION OFFICE:
3904 B ABEL DRIVE
COLUMBIA, PA 17512
PH: 717-522-5031
Fax: 717-522-5046

WWW.PENNTERRA.COM

COPYRIGHT 2019 BY THE ENGINEER
THE INFORMATION CONTAINED HEREON MAY NOT BE USED OR COPIED IN ANY MANNER WITHOUT THE WRITTEN PERMISSION OF THE ENGINEER EXCEPT AS OTHERWISE PROVIDED BY APPROPRIATE LAWS OR STATUTES.
© PENNTERRA ENGINEERING 2019 ALL RIGHTS RESERVED

COMMONWEALTH OF PENNSYLVANIA
REGISTERED PROFESSIONAL
JOHN C. SEPP
ENGINEER
040003-E
Seal

Seal

Designer: RRK
Draftsman: JDB
Proj.Manager: JCS
Surveyor: ----
Perimeter Ck.:
Book: ---- Pg: ----
Drive: Layout: 16094-06-GP
Acad: GEOMETRY PLAN-24'X36'

Date	Description
12-3-19 MLH	REVISED PER TWP COMMENTS
11-1-19 MLH	REVISED PER TWP COMMENTS

REVISIONS

WEST CHERRY LANE MULTI USE BUILDING

FERGUSON TOWNSHIP
CENTRE COUNTY
PENNSYLVANIA

PRELIMINARY/FINAL LAND DEVELOPMENT PLAN

GEOMETRY PLAN

PROJECT NO. 16094.01
DATE SEPTEMBER 12, 2019
SCALE 1"=20'
SHEET NO. 6

P:\Jobproj\2016\16094\dwg\plot files\final plans\FINAL PLANS - REVISED\16094-06-GP.dwg, 12/4/2019 11:48:33 AM, 1:1

GRADING NOTES:

1. ALL SITE WORK SHALL BE DONE IN ACCORDANCE WITH THE PLANS PREPARED BY PENNTERRA, THE CURRENT REQUIREMENTS OF THE FERGUSON TOWNSHIP, THE APPLICABLE SECTIONS OF THE PENNDOT STANDARD SPECIFICATIONS FOR ROADWAY CONSTRUCTION, AND ALL OTHER PERTINENT FEDERAL AND STATE LAWS.
2. THE CONTRACTOR SHALL COMPLY AT ALL TIMES WITH APPLICABLE FEDERAL, STATE AND LOCAL LAWS, PROVISIONS, AND POLICIES GOVERNING SAFETY AND HEALTH, INCLUDING THE FEDERAL CONSTRUCTION SAFETY ACT (PUBLIC LAW 91–54), FEDERAL REGISTER, CHAPTER XVII, PART 1926 OF TITLE 29 REGULATIONS, OCCUPATIONAL SAFETY AND HEALTH REGULATIONS FOR CONSTRUCTION, AND SUBSEQUENT PUBLICATIONS UPDATING THESE REGULATIONS.
3. THE CONTRACTOR SHALL BE RESPONSIBLE FOR EXAMINING THE AREAS AND CONDITIONS UNDER WHICH THE PROJECT IS TO BE CONSTRUCTED PRIOR TO THE SUBMISSION OF A BID. SUBMISSION OF A BID SHALL BE CONSTRUED TO MEAN THE CONTRACTOR HAS REVIEWED THE SITE AND IS FAMILIAR WITH CONDITIONS AND CONSTRAINTS OF THE SITE.
4. BEFORE EXCAVATION, ALL UNDERGROUND UTILITIES SHALL BE LOCATED IN THE FIELD BY THE PROPER AUTHORITIES. THE CONTRACTOR SHALL NOTIFY PA ONE CALL 1–800–242–1776. THE LOCATION OF ALL UTILITIES AND UNDERGROUND STRUCTURES ARE APPROXIMATE AND MAY NOT ALL BE SHOWN. IT IS THE RESPONSIBILITY OF THE CONTRACTOR TO DETERMINE THE EXISTENCE AND EXACT LOCATION OF ALL UTILITIES AND UNDERGROUND STRUCTURES.
5. ALL EXISTING TREES, VEGETATION, PAVEMENTS, CONCRETE FOUNDATIONS, STRUCTURES AND ORGANIC TOPSOIL SHALL BE STRIPPED AND REMOVED FROM NEW CONSTRUCTION AREAS UNLESS NOTED OTHERWISE.
6. MAXIMUM SLOPES SHALL BE 3:1 (HORIZONTAL:VERTICAL) UNLESS NOTED OTHERWISE.
7. AN AS–BUILT DRAWING OF NEW UTILITY SERVICES MUST BE PREPARED BY THE CONTRACTOR AND SUBMITTED TO THE OWNER UPON COMPLETION OF THE PROJECT.
8. ALL AREAS NOT PAVED SHALL BE TOPSOILED, SEEDED, MULCHED OR LANDSCAPED UNLESS OTHERWISE NOTED IN THE CONSTRUCTION DRAWINGS, SITE SPECIFICATIONS OR INSTRUCTED BY THE OWNER.
9. CONTRACTOR SHALL REFER TO OTHER PLANS WITHIN THIS CONSTRUCTION SET FOR OTHER PERTINENT INFORMATION.
10. THE MAXIMUM SLOPE WITHIN ALL THE HANDICAPPED SPACES SHALL BE 2.00%
11. THE MAXIMUM SLOPE FOR ALL SIDEWALKS SHALL BE 4.90% WITH A MAXIMUM CROSS SLOPE OF 2.00% AND CURB RAMPS SHALL HAVE A MAXIMUM SLOPE OF 8.30%.
12. CONTOURS (ON APPLICABLE SHEETS) SHOWN WERE GENERATED FROM A FIELD SURVEY BY PENNTERRA ENGINEERING, INC. BASED ON USGS DATUM (NAD83/NAVD88). THE PROJECT BENCHMARK IS THE TOP OF CASTING (TC=1117.96) OF THE EXISTING SANITARY MANHOLE, LOCATED AT THE INTERSECTION OF WEST CHERRY LANE AND NORTH ALLEN STREET.
13. ALL DISTURBED AREAS NOT PROPOSED FOR PAVING OR CONCRETE SHALL HAVE 6" OF TOPSOIL SPREAD UNIFORMLY TO THE PROPOSED FINISHED GRADE UNLESS NOTED OTHERWISE.

GENERAL CONSTRUCTION UTILITY NOTES:

1. CONTRACTOR SHALL VERIFY THE LOCATION OF MANHOLES, INLETS, VALVES, ETC. CONTRACTOR SHALL TEST PIT EXISTING UTILITIES AS DEEMED NECESSARY WITHIN THE LIMITS OF CONSTRUCTION TO DETERMINE THE EXACT LOCATION AND DEPTH AS REQUIRED. CONTRACTOR SHALL REPORT ANY DISCREPANCIES FROM THOSE INDICATED ON THE PLAN TO PENNTERRA ENGINEERING, INC. ALL EXISTING UTILITIES SHALL BE RETAINED UNLESS MARKED OTHERWISE ON THE PLAN. EXISTING A PROPOSED APPURTENANCES SHALL BE ADJUSTED TO FINAL GRADE. DAMAGE TO EXISTING CONDITIONS AND UTILITIES TO REMAIN SHALL BE REPAIRED AS REQUIRED TO THE OWNERS SATISFACTION AT THE EXPENSE OF THE CONTRACTOR.
2. LOCATION OF EXISTING 6" SANITARY SEWER LATERALS ARE APPROXIMATE.
3. ALL EXISTING UTILITIES NOT TO BE REMOVED OR ABANDONED ARE TO REMAIN OPERATIONAL AT ALL TIMES. APPROPRIATE EXISTING UTILITIES SHALL REMAIN IN SERVICE UNTIL THE REPLACEMENT/RELOCATED UTILITIES ARE OPERATIONAL.
4. ALL SANITARY SEWER SEWER SHALL BE CONSTRUCTED IN ACCORDANCE WITH D.E.P REGULATIONS.
5. ALL SANITARY SEWER LINES SHALL HAVE A MINIMUM COVER OF 48".
6. ALL PUBLIC WATER LINES SHALL BE CONSTRUCTED IN ACCORDANCE WITH ALL STATE COLLEGE BOROUGH WATER AUTHORITY (SCBWA) SPECIFICATIONS AND STANDARDS. ALL PRIVATE WATER LINES SHALL BE CONSTRUCTED IN ACCORDANCE WITH THE "MATERIALS & INSTALLATION SPECIFICATIONS FOR PRIVATE DISTRIBUTION LINES, SERVICE LINES & FIRE HYDRANTS" BY SCBWA.
7. ALL WATER LINES SHALL HAVE A MINIMUM COVER OF 48".
8. CONTRACTOR SHALL REPAIR OR REPLACE ALL CURBING, UTILITIES, SIDEWALKS, LANDSCAPING, ETC. WITHIN THE SITE DAMAGED DURING CONSTRUCTION THAT ARE NOT INDICATED TO BE REMOVED.
9. CONTRACTOR SHALL COORDINATE WITH UTILITY COMPANIES ON INSTALLATION, RELOCATION OR REPLACEMENT OF ELECTRIC, PHONE, GAS OR CABLE TELEVISION SERVICE AS REQUIRED.
10. CONTRACTOR SHALL NOTIFY OWNER'S TESTING AGENCY PRIOR TO ANY PLACEMENT AND COMPACTION OF FILL MATERIALS IN ANY BUILDING PAD AREAS. PADS SHALL BE PREPARED AND COMPACTED PER THE PROJECT SPECIFICATIONS AND CERTIFIED BY THE OWNERS TESTING AGENCY. CONTRACTOR SHALL BE RESPONSIBLE FOR THE REMOVAL AND REPLACEMENT OF ANY FILL MATERIALS NOT MEETING THE SPECIFICATIONS SET FORTH.
11. CONTRACTOR SHALL MAINTAIN ON SITE ONE SET OF CONTRACT DOCUMENTS TO BE UTILIZED FOR RECORD DOCUMENTS. FIELD RECORDS OF THE DEPTH AND LOCATIONS OF ALL UNDERGROUND SERVICE UTILITIES (PRIMARY AND SECONDARY ELECTRIC, PHONE, CABLE TELEVISION) SHALL BE ADDED TO THE RECORD SET BY THE CONTRACTOR AS WELL AS ALL FIELD REVISIONS AND ADJUSTMENTS.
12. CONTRACTOR SHALL CONTACT THE PA ONE CALL SYSTEM @ 1–800–242–1776 AT LEAST THREE (3) DAYS PRIOR TO CONSTRUCTION.

STORMWATER NOTES:

1. REFER TO SHEET 10 FOR STORM SEWER STRUCTURE AND PIPE DATA.
2. UPDATE PLAN WITH DOWNSPOUT LOCATIONS WITH FINAL BUILDING DESIGN. CONTRACTOR SHALL CONNECT DOWNSPOUTS TO 'RD' – 8" ROOF DRAINS.
3. FOR ALL STORMWATER DESIGN COMPUTATIONS REFER TO WEST CHERRY LANE MULTI–USE BUILDING POST CONSTRUCTION STORMWATER REPORT, DATED LAST REVISED: JUNE 25, 2018, BY PENNTERRA ENGINEERING, INC.
4. THE OWNER IS RESPONSIBLE FOR CARRYING OUT THE STORMWATER MANAGEMENT FACILITIES OWNERSHIP AND MAINTENANCE PROGRAM.

EROSION AND SEDIMENTATION CONTROL NOTES:

1. FOR ALL EROSION AND SEDIMENTATION CONTROL MEASURES REFER TO SHEETS ES1 AND ES2 WITHIN THE PRELIMINARY/FINAL LAND DEVELOPMENT PLAN FOR WEST CHERRY LANE MULTI–USE BUILDING, DATED LAST REVISED: JUNE 25, 2018, BY PENNTERRA ENGINEERING, INC.

EXISTING FEATURES LEGEND

- Existing Building
- Existing Curbing
- Existing Contours (10's)
- Existing Soil Limit Line / Boundary
- HaB Existing Soil Type
- Existing Tree Line
- Existing Overhead Utility Line w/ Pole
- Existing 6" & 8" PVC Sanitary Sewer w/ Manhole
- Existing 4", 6" & 8" D.I.P. Water Line w/ Valve
- Existing 2" & 4" Plastic & D.I.P. Gas Line
- Existing Underground Electric
- Existing 6" PVC & 12" PVC, 12", 15", 18" CMP Storm Sewer w/ Inlet
- Existing Concrete Areas
- Existing Gravel Areas
- Existing Retaining Wall
- Existing Vinyl/Wooden Fence
- Existing Fire Hydrant
- Existing Manhole
- Existing Utility Pole
- Existing Light Pole/Standard
- Existing Light Pole (Single Fixture)
- Existing Sign
- M.B. Existing Mail Box
- Existing Deciduous Tree
- Existing Evergreen Tree
- Existing Shrub
- 25% Slopes Or Greater
- Flood Plain

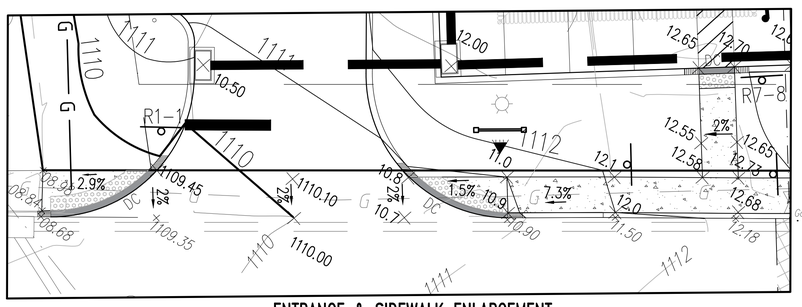

ENTRANCE & SIDEWALK ENLARGEMENT
SCALE: 1"=10'

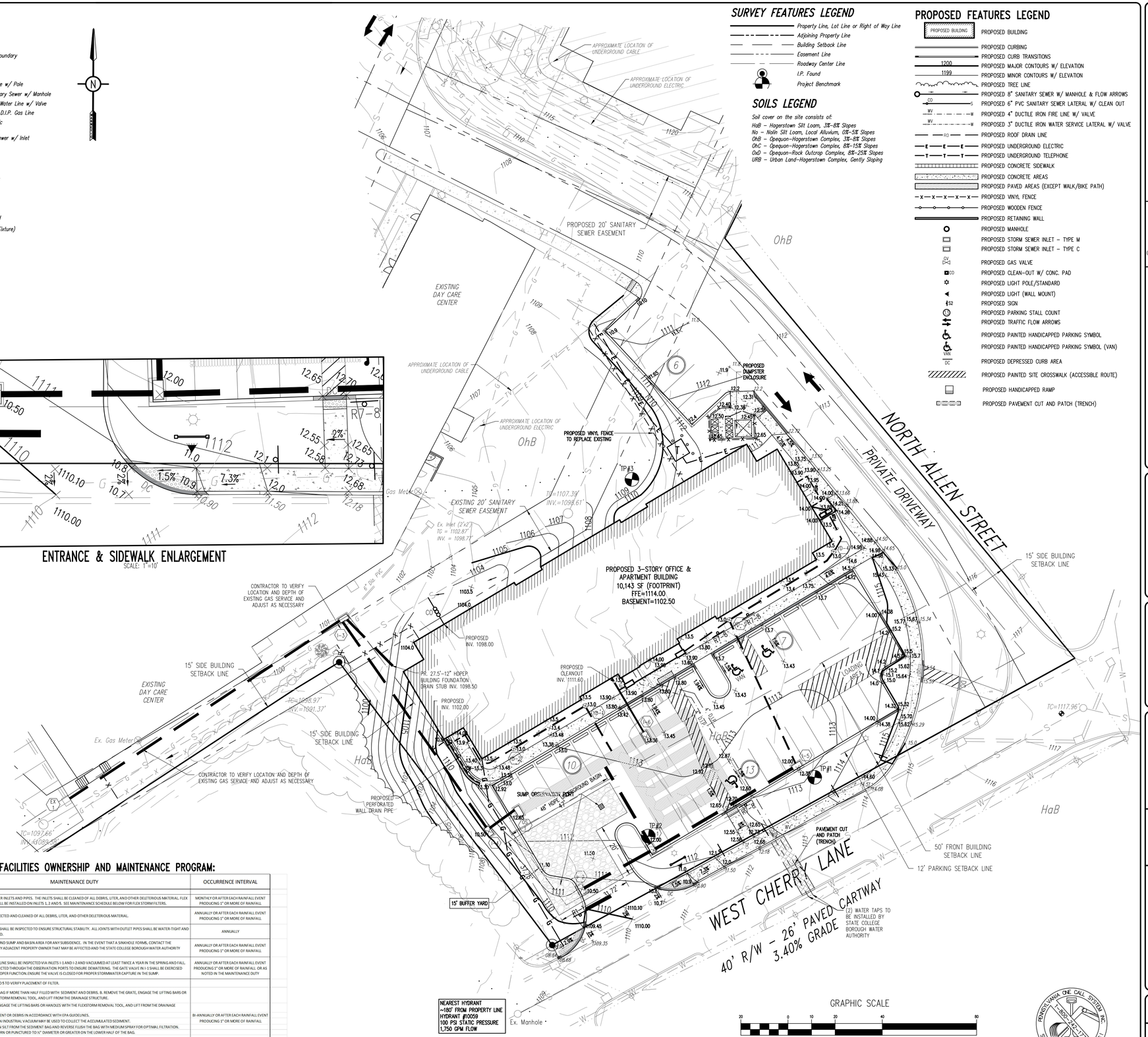

STORMWATER MANAGEMENT FACILITIES OWNERSHIP AND MAINTENANCE PROGRAM:

STORMWATER BMP MAINTENANCE ITEM	MAINTENANCE DUTY	OCCURRENCE INTERVAL
STORM SEWER INLETS AND PIPES	INSPECT ALL STORM SEWER INLETS AND PIPES. THE INLETS SHALL BE CLEANED OF ALL DEBRIS, LITER, AND OTHER DELETERIOUS MATERIAL. FLEX STORM INLET FILTERS SHALL BE INSTALLED ON INLETS 1, 2 AND 5. SEE MAINTENANCE SCHEDULE BELOW FOR FLEX STORM FILTERS.	MONTHLY OR AFTER EACH RAINFALL EVENT PRODUCING 1" OR MORE OF RAINFALL
48" UNDERGROUND DETENTION BASIN	THE BASIN SHALL BE INSPECTED AND CLEANED OF ALL DEBRIS, LITER, AND OTHER DELETERIOUS MATERIAL.	ANNUALLY OR AFTER EACH RAINFALL EVENT PRODUCING 1" OR MORE OF RAINFALL
BASIN OUTLET STUCTURES	THE OUTLET STRUCTURES SHALL BE INSPECTED TO ENSURE STRUCTURAL STABILITY. ALL JOINTS WITH OUTLET PIPES SHALL BE WATER-TIGHT AND IF NECESSARY RE-GROUTED.	ANNUALLY
SINKHOLE PREVENTION MEASURES	INSPECT THE UNDERGROUND SUMP AND BASIN AREA FOR ANY SUBSIDENCE. IN THE EVENT THAT A SINKHOLE FORMS, CONTACT THE TOWNSHIP ENGINEER, ANY ADJACENT PROPERTY OWNER THAT MAY BE AFFECTED AND THE STATE COLLEGE BOROUGH WATER AUTHORITY IMMEDIATELY.	ANNUALLY OR AFTER EACH RAINFALL EVENT PRODUCING 1" OR MORE OF RAINFALL
INFILTRATION SUMP	THE SUMP DISTRIBUTION LINE SHALL BE INSPECTED VIA INLETS 1-3 AND 1-2 AND VACUUMED AT LEAST TWICE A YEAR IN THE SPRING AND FALL. THE SUMP SHALL BE INSPECTED THROUGH THE OBSERVATION PORTS TO ENSURE DEWATERING. THE GATE VALVE IN I-1 SHALL BE EXERCISED ANNUALLY TO ENSURE PROPER FUNCTION. ENSURE THE VALVE IS CLOSED FOR PROPER STORMWATER CAPTURE IN THE SUMP.	ANNUALLY OR AFTER EACH RAINFALL EVENT PRODUCING 1" OR MORE OF RAINFALL OR AS NOTED IN THE MAINTENANCE DUTY
FLEX STORM PURE INLET FILTERS	A. INSPECT INLETS 1, 2 AND 5 TO VERIFY PLACEMENT OF FILTER. B. EMPTY THE SEDIMENT BAG IF MORE THAN HALF FILLED WITH SEDIMENT AND DEBRIS. B. REMOVE THE GRATE, ENGAGE THE LIFTING BARS OR HANDLES WITH THE FLEXSTORM REMOVAL TOOL, AND LIFT FROM THE DRAINAGE STRUCTURE. C. REMOVE THE GRATE, ENGAGE THE LIFTING BARS OR HANDLES WITH THE FLEXSTORM REMOVAL TOOL, AND LIFT FROM THE DRAINAGE STRUCTURE. D. DISPOSE OF THE SEDIMENT OR DEBRIS IN ACCORDANCE WITH EPA GUIDELINES. E. AS AN ALTERNATIVE, AN INDUSTRIAL VACUUM MAY BE USED TO COLLECT THE ACCUMULATED SEDIMENT. F. REMOVE ANY CAKED ON SILT FROM THE SEDIMENT BAG AND REVERSE FLUSH THE BAG WITH MEDIUM SPRAY FOR OPTIMAL FILTRATION. G. REPLACE THE BAG IF TORN OR PUNCTURED TO ¼" DIAMETER OR GREATER ON THE LOWER HALF OF THE BAG. H. POST CONSTRUCTION PC BAGS MAINT.: AT 50% SATURATION, THE AVERAGE 2' X 2' ADSORB-IT LINED PC FILTER WILL RETAIN APPROXIMATELY 75 OZ (4.2 LBS) OF OIL AND SHOULD BE SERVICED. IT CAN BE CENTRIFUGED OR PASSED THROUGH A WRINGER TO RECOVER THE OILS, AND THE FABRIC REUSED WITH 8% TO 90% EFFICACY. IT MAY ALSO BE RECYCLED FOR ITS FUEL VALUE THROUGH WASTE TO ENERGY INCINERATION.	BI-ANNUALLY OR AFTER EACH RAINFALL EVENT PRODUCING 1" OR MORE OF RAINFALL
EXISTING SITE STORMWATER MANAGEMENT FACILITES	ALL EXISTING STORMWATER MANAGEMENT FACILITES CONSTRUCTED PRIOR TO THIS PLAN SHALL BE MAINTAINED IN ACCORDANCE WITH THE STORMWATER FACILITIES MAINTENANCE PROGRAM INCLUDED WITH THE PRIOR ASSOCIATED APPROVED AND RECORDED PLANS.	AS NOTED IN THE MAINTENACE DUTY

*DOCUMENTATION OF INSPECTIONS MUST BE MAINTAINED BY THE OWNER AND SUBMITTED TO TOWNSHIP UPON REQUEST. MAINTENANCE INSPECTIONS MAY BE PERFORMED BY THE TOWNSHIP TO ENSURE PROPER

SURVEY FEATURES LEGEND

- Property Line, Lot Line or Right of Way Line
- Adjoining Property Line
- Building Setback Line
- Easement Line
- Roadway Center Line
- I.P. Found
- Project Benchmark

SOILS LEGEND

Soil cover on the site consists of:

HaB – Hagerstown Silt Loam, 3%–8% Slopes
No – Nolin Silt Loam, Local Alluvium, 0%–5% Slopes
OhB – Opequon–Hagerstown Complex, 3%–8% Slopes
OhC – Opequon–Hagerstown Complex, 8%–15% Slopes
OxD – Opequon–Rock Outcrop Complex, 8%–25% Slopes
URB – Urban Land–Hagerstown Complex, Gently Sloping

PROPOSED FEATURES LEGEND

- PROPOSED BUILDING — PROPOSED BUILDING
- PROPOSED CURBING
- PROPOSED CURB TRANSITIONS
- 1200 PROPOSED MAJOR CONTOURS W/ ELEVATION
- 1199 PROPOSED MINOR CONTOURS W/ ELEVATION
- PROPOSED TREE LINE
- PROPOSED 8" SANITARY SEWER W/ MANHOLE & FLOW ARROWS
- CO PROPOSED 6" PVC SANITARY SEWER LATERAL W/ CLEAN OUT
- WV PROPOSED 4" DUCTILE IRON FIRE LINE W/ VALVE
- WV PROPOSED 3" DUCTILE IRON WATER SERVICE LATERAL W/ VALVE
- RD PROPOSED ROOF DRAIN LINE
- E PROPOSED UNDERGROUND ELECTRIC
- T PROPOSED UNDERGROUND TELEPHONE
- PROPOSED CONCRETE SIDEWALK
- PROPOSED CONCRETE AREAS
- PROPOSED PAVED AREAS (EXCEPT WALK/BIKE PATH)
- PROPOSED VINYL FENCE
- PROPOSED WOODEN FENCE
- PROPOSED RETAINING WALL
- PROPOSED MANHOLE
- PROPOSED STORM SEWER INLET – TYPE M
- PROPOSED STORM SEWER INLET – TYPE C
- GV PROPOSED GAS VALVE
- CO PROPOSED CLEAN-OUT W/ CONC. PAD
- PROPOSED LIGHT POLE/STANDARD
- PROPOSED LIGHT (WALL MOUNT)
- S2 PROPOSED SIGN
- 10 PROPOSED PARKING STALL COUNT
- PROPOSED TRAFFIC FLOW ARROWS
- PROPOSED PAINTED HANDICAPPED PARKING SYMBOL
- VAN PROPOSED PAINTED HANDICAPPED PARKING SYMBOL (VAN)
- DC PROPOSED DEPRESSED CURB AREA
- PROPOSED PAINTED SITE CROSSWALK (ACCESSIBLE ROUTE)
- PROPOSED HANDICAPPED RAMP
- PROPOSED PAVEMENT CUT AND PATCH (TRENCH)

GRAPHIC SCALE
20 0 10 20 40 80
(IN FEET)
1 inch = 20 ft.

BEFORE YOU DIG ANYWHERE IN PENNSYLVANIA ! CALL 1–800–242–1776
NON–MEMBERS MUST BE CONTACTED DIRECTLY

PennTerra ENGINEERING INC.
CENTRAL PENNSYLVANIA REGION OFFICE:
3075 ENTERPRISE DRIVE
SUITE 100
STATE COLLEGE, PA 16801
PH: 814–231–8285
Fax: 814–237–2308
LANCASTER REGION OFFICE:
3904 B ABEL DRIVE
COLUMBIA, PA 17512
PH: 717–522–5031
Fax: 717–522–5046
WWW.PENNTERRA.COM

COPYRIGHT 2019 BY THE ENGINEER
THE INFORMATION CONTAINED HEREON MAY NOT BE USED OR COPIED IN ANY MANNER WITHOUT THE WRITTEN PERMISSION OF THE ENGINEER EXCEPT AS OTHERWISE PROVIDED BY APPROPRIATE LAWS OR STATUTES.
© PENNTERRA ENGINEERING 2019
ALL RIGHTS RESERVED

COMMONWEALTH OF PENNSYLVANIA REGISTERED PROFESSIONAL JOHN C. SEPP ENGINEER 040003–E
Seal

Designer RRK
Draftsman JDB
Proj.Manager JCS
Surveyor ----
Perimeter Ck.
Book ---- Pg ----
Drawing 16094–07–GP–UP
Acad GRADING–UTILITY–24'X36'

Date	Description
12–3–19 MLH	REVISED PER TWP COMMENTS
11–1–19 MLH	REVISED PER TWP COMMENTS

REVISIONS

WEST CHERRY LANE MULTI USE BUILDING

FERGUSON TOWNSHIP
CENTRE COUNTY
PENNSYLVANIA

PRELIMINARY/FINAL LAND DEVELOPMENT PLAN

GRADING, UTILITY, AND STORMWATER MANAGEMENT PLAN

PROJECT NO. 16094.01
DATE SEPTEMBER 12, 2019
SCALE 1"=20'
SHEET NO. 7

P:\ldotpro\2016\16094\dwg\plot files\final plans\FINAL PLANS - REVISED\16094-07-GP-UP.dwg, 12/4/2019 11:48:56 AM, 1:1

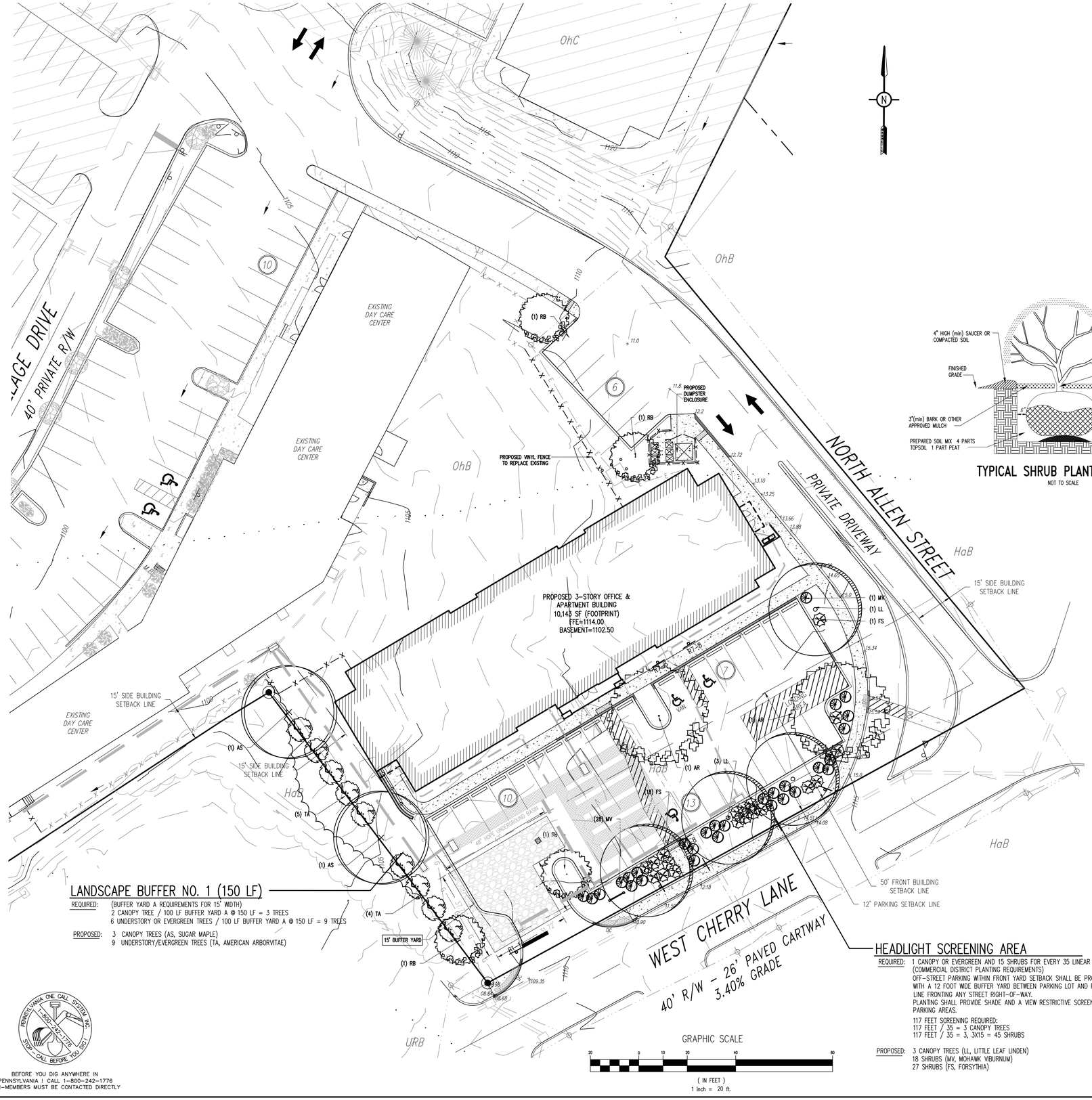

LANDSCAPE BUFFER NO. 1 (150 LF)

REQUIRED: (BUFFER YARD A REQUIREMENTS FOR 15' WIDTH)
2 CANOPY TREE / 100 LF BUFFER YARD A @ 150 LF = 3 TREES
6 UNDERSTORY OR EVERGREEN TREES / 100 LF BUFFER YARD A @ 150 LF = 9 TREES

PROPOSED: 3 CANOPY TREES (AS, SUGAR MAPLE)
9 UNDERSTORY/EVERGREEN TREES (TA, AMERICAN ARBORVITAE)

HEADLIGHT SCREENING AREA

REQUIRED: 1 CANOPY OR EVERGREEN AND 15 SHRUBS FOR EVERY 35 LINEAR FEET (COMMERCIAL DISTRICT PLANTING REQUIREMENTS)
OFF-STREET PARKING WITHIN FRONT YARD SETBACK SHALL BE PROVIDED WITH A 12 FOOT WIDE BUFFER YARD BETWEEN PARKING LOT AND PROPERTY LINE FRONTING ANY STREET RIGHT-OF-WAY.
PLANTING SHALL PROVIDE SHADE AND A VIEW RESTRICTIVE SCREEN FOR PARKING AREAS.

117 FEET SCREENING REQUIRED:
117 FEET / 35 = 3 CANOPY TREES
117 FEET / 35 = 3, 3X15 = 45 SHRUBS

PROPOSED: 3 CANOPY TREES (LL, LITTLE LEAF LINDEN)
18 SHRUBS (MV, MOHAWK VIBURNUM)
27 SHRUBS (FS, FORSYTHIA)

BEFORE YOU DIG ANYWHERE IN PENNSYLVANIA | CALL 1-800-242-1776
NON-MEMBERS MUST BE CONTACTED DIRECTLY

PLANTING SCHEDULE

SYMBOL	KEY	QTY	COMMON NAME	BOTANICAL NAME	SIZE	MATURE HEIGHT / SPREAD
CANOPY TREES						
	AS	2	SUGAR MAPLE	Acer saccharum	2"-2-1/2" Cal.	60' / 40'
	AR	2	LONDON PLANETREE	Platanus x acerifolia	2"-2-1/2" Cal.	50' / 40'
	RB	4	HERITAGE RIVER BIRCH	Betula nigra 'Heritage'	2"-2-1/2" Cal.	35' / 20'
	LL	4	LITTLE LEAF LINDEN	Tilia cordata	2"-2-1/2" Cal.	60' / 30'
UNDERSTORY / EVERGREEN TREES						
	TA	9	AMERICAN ARBORVITAE	Thuja occidentalis	6' Ht. min	40' / 10'
SHRUBS / GROUND COVER						
	MV	29	MOHAWK VIBURNUM	Viburnum x burkwoodii "Mowhawk"	2 GAL.	5' / 6'
	FS	19	FORSYTHIA	Forsythia x intermedia 'Spectabilis'	2 GAL.	5' / 5'

NOTE: ALL TREES AND SHRUBS SHALL BE PLANTED IN ACCORDANCE WITH THE "FERGUSON TOWNSHIP REGULATIONS FOR ARBOR WORK."

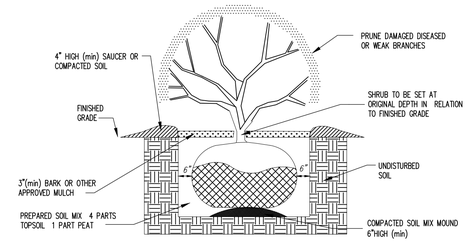

TYPICAL SHRUB PLANTING DETAIL
NOT TO SCALE

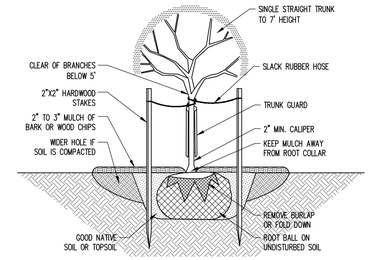

TREE PLANTING DETAIL
NOT TO SCALE

SURVEY FEATURES LEGEND

- Property Line, Lot Line or Right of Way Line
- Adjoining Property Line
- Building Setback Line
- Easement Line
- Roadway Center Line
- I.P. Found

EXISTING FEATURES LEGEND

- Existing Building
- Existing Curbing
- Existing Contours (10's)
- Existing Soil Limit Line / Boundary
- HaB Existing Soil Type
- Existing Tree Line
- Existing Overhead Utility Line w/ Pole
- Existing 6" & 8" PVC Sanitary Sewer w/ Manhole
- Existing 4", 6" & 8" D.I.P. Water Line w/ Valve
- Existing 2" & 4" Plastic & D.I.P. Gas Line
- Existing Underground Electric
- Existing 6" PVC & 12" PVC, 12", 15", 18" CMP Storm Sewer w/ Inlet
- Existing Concrete Areas
- Existing Gravel Areas
- Existing Retaining Wall
- Existing Vinyl/Wooden Fence
- Existing Fire Hydrant
- Existing Manhole
- Existing Utility Pole
- Existing Light Pole/Standard
- Existing Light Pole (Single Fixture)
- Existing Sign
- M.B. Existing Mail Box
- Existing Deciduous Tree
- Existing Evergreen Tree
- Existing Shrub
- 25% Slopes Or Greater
- Flood Plain

PROPOSED FEATURES LEGEND

- PROPOSED BUILDING — PROPOSED BUILDING
- PROPOSED CURBING
- PROPOSED CURB TRANSITIONS
- PROPOSED TREE LINE
- PROPOSED CONCRETE SIDEWALK
- PROPOSED CONCRETE AREAS
- PROPOSED PAVED AREAS (EXCEPT WALK/BIKE PATH)
- PROPOSED VINYL FENCE
- PROPOSED WOODEN FENCE
- PROPOSED RETAINING WALL
- PROPOSED MANHOLE
- PROPOSED STORM SEWER INLET - TYPE M
- PROPOSED STORM SEWER INLET - TYPE C
- PROPOSED LIGHT POLE/STANDARD
- PROPOSED LIGHT (WALL MOUNT)
- S2 PROPOSED SIGN
- PROPOSED PARKING STALL COUNT
- PROPOSED TRAFFIC FLOW ARROWS
- PROPOSED PAINTED HANDICAPPED PARKING SYMBOL
- VAN PROPOSED PAINTED HANDICAPPED PARKING SYMBOL (VAN)
- DC PROPOSED DEPRESSED CURB AREA
- PROPOSED PAINTED SITE CROSSWALK (ACCESSIBLE ROUTE)
- PROPOSED HANDICAPPED RAMP

SOILS LEGEND

Soil cover on the site consists of:

HaB - Hagerstown Silt Loam, 3%-8% Slopes
No - Nolin Silt Loam, Local Alluvium, 0%-5% Slopes
OhB - Opequon-Hagerstown Complex, 3%-8% Slopes
OhC - Opequon-Hagerstown Complex, 8%-15% Slopes
OxD - Opequon-Rock Outcrop Complex, 8%-25% Slopes
URB - Urban Land-Hagerstown Complex, Gently Sloping

PennTerra ENGINEERING INC.

CENTRAL PENNSYLVANIA REGION OFFICE:
3075 ENTERPRISE DRIVE
SUITE 100
STATE COLLEGE, PA 16801
PH: 814-231-8285
Fax: 814-237-2308

LANCASTER REGION OFFICE:
3904 B ABEL DRIVE
COLUMBIA, PA 17512
PH: 717-522-5031
Fax: 717-522-5046

WWW.PENNTERRA.COM

COPYRIGHT 2019 BY THE ENGINEER
THE INFORMATION CONTAINED HEREON MAY NOT BE USED OR COPIED IN ANY MANNER WITHOUT THE WRITTEN PERMISSION OF THE ENGINEER EXCEPT AS OTHERWISE PROVIDED BY APPROPRIATE LAWS OR STATUES.
© PENNTERRA ENGINEERING 2019 ALL RIGHTS RESERVED

COMMONWEALTH OF PENNSYLVANIA
REGISTERED PROFESSIONAL
JOHN C. SEPP
ENGINEER
040003-E
Seal

Seal

Designer RRK
Draftsman JDB
Proj.Manager JCS
Surveyor ----
Perimeter Ck.
Book ---- Pg ----
Drive Layout 16094-08-LP
Acad LANDSCAPE-24'X36'

Date	Description
12-3-19 MLH	REVISED PER TWP COMMENTS
11-1-19 MLH	REVISED PER TWP COMMENTS

REVISIONS

WEST CHERRY LANE MULTI USE BUILDING

FERGUSON TOWNSHIP
CENTRE COUNTY
PENNSYLVANIA

PRELIMINARY/FINAL LAND DEVELOPMENT PLAN

LANDSCAPE PLAN

PROJECT NO. 16094.01
DATE SEPTEMBER 12, 2019
SCALE 1"=20'
SHEET NO. 8

P:\sdtprog\2016\16094\dwg\plot files\final plans\FINAL PLANS - REVISED\16094-08-LP.dwg, 12/4/2019 11:49:23 AM, 1:1

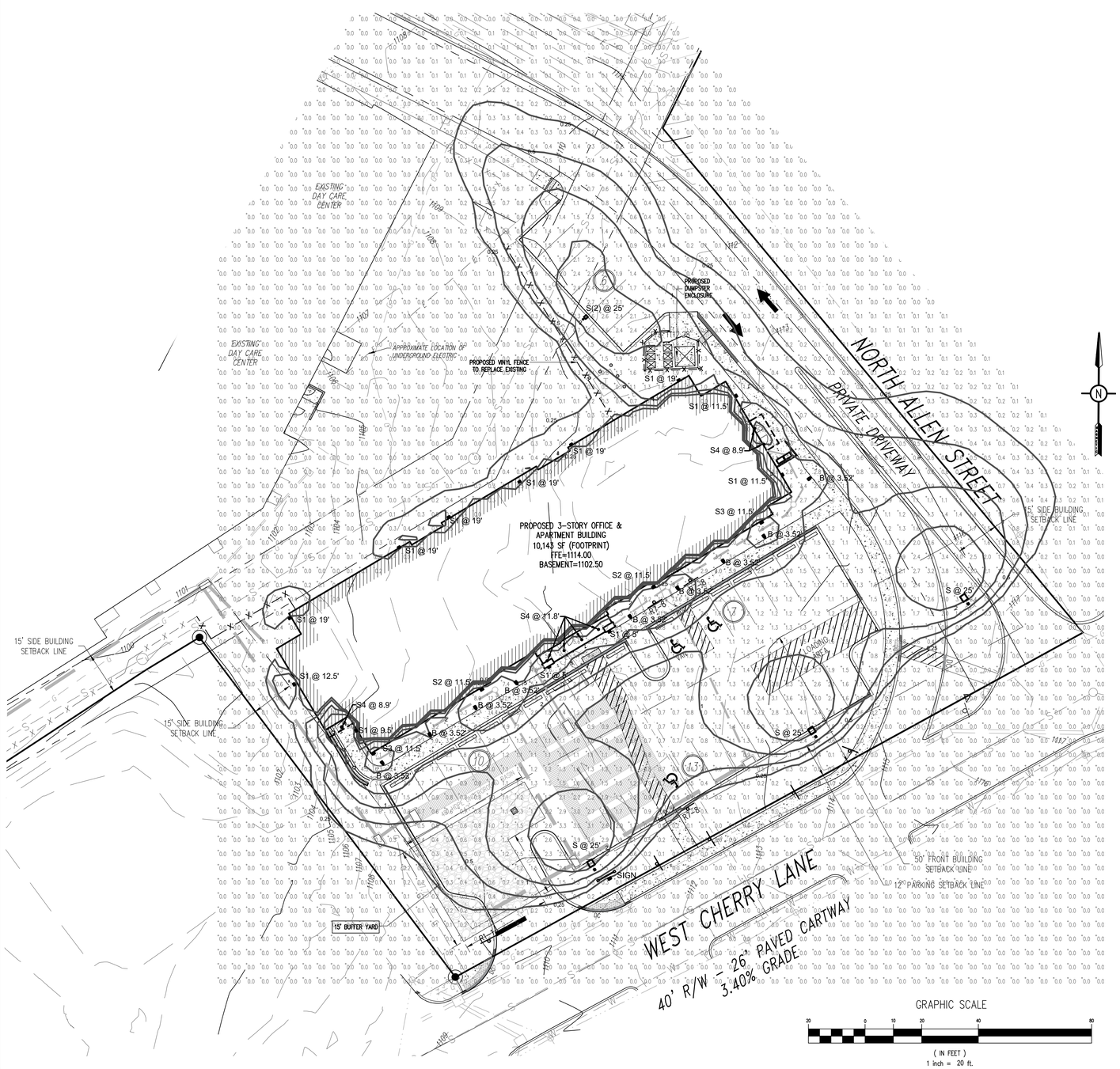

Schedule										
Symbol	Label	QTY	MANUFACTURER	Catalog Number	Description	Lamp	Number Lamps	Lumens per Lamp	LLF	Wattage
	S	2	RAB LIGHTING	ALED4T78/BL - RWLED4T78 – RWLED4T78/BLSF - WPLED4T78/BL (TYPE IV)	CAST FINNED METAL HOUSING, 6 CIRCUIT BOARDS EACH WITH 1 LED. MOLDED 2-PIECE PLASTIC REFLECTOR WITH SPECULAR FINISH AND 1 APERTURE PER LED. CLEAR FLAT GLASS LENS IN CAST WHITE PAINTED METAL LENS FRAME.	SIX WHITE MULTI-CHIP LIGHT EMITTING DIODES (LEDS), 2 LEDS TILTED 56-DEGREES FROM VERTICAL BASE-UP POSITION AND CANTED 18-DEGREES FROM STRAIGHT AHEAD, 2 LEDS TILTED 57-DEGREES FROM VERTICAL BASE-UP POSITION AND CANTED 16-DEGREES FROM STRAIGHT AHEAD, 2 LEDS TILTED 57-DEGREES FROM VERTICAL BASE-UP POSITION AND CANTED 22-DEGREES FROM STRAIGHT AHEAD.	6	1259	0.9	79.1
	S	1	RAB LIGHTING	ALED4T78/BL - RWLED4T78/BL - - RWLED4T78SF/BL - WPLED4T78/BL (TYPE IV) (EXISTING LIGHT)	CAST FINNED METAL HOUSING, 6 CIRCUIT BOARDS EACH WITH 1 LED. MOLDED 2-PIECE PLASTIC REFLECTOR WITH SPECULAR FINISH AND 1 APERTURE PER LED. CLEAR FLAT GLASS LENS IN CAST WHITE PAINTED METAL LENS FRAME. (EXISTING LIGHT)	SIX WHITE MULTI-CHIP LIGHT EMITTING DIODES (LEDS), 2 LEDS TILTED 56-DEGREES FROM VERTICAL BASE-UP POSITION AND CANTED 18-DEGREES FROM STRAIGHT AHEAD, 2 LEDS TILTED 57-DEGREES FROM VERTICAL BASE-UP POSITION AND CANTED 16-DEGREES FROM STRAIGHT AHEAD, 2 LEDS TILTED 57-DEGREES FROM VERTICAL BASE-UP POSITION AND CANTED 22-DEGREES FROM STRAIGHT AHEAD.	6	1259	0.9	79.1
	S1	12	LITHONIA LIGHTING	OLLWU	OUTDOOR LED WALL UPLIGHT AND DOWNLIGHT CYLINDER WITH 4000K LEDS AND POLYCARBONATE LENSES	LED	1	491	0.9	14.3
	S2	2	LITHONIA LIGHTING	WST LED P2 40K VW MVOLT	WST LED, Performance package 2, 4000 K, visual comfort wide, MVOLT	LED	1	3511	0.9	25
	S3	2	LITHONIA LIGHTING	WST LED P1 40K VF MVOLT	WST LED, Performance package 1, 4000 K, visual comfort forward throw, MVOLT	LED	1	1639	0.9	12
	S4	7	LITHONIA LIGHTING	WF6 LED 40K MVOLT	6" Ultra-Thin LED Wafer Downlight, 3000K CCT, 120 - 277V	LED	1	1032	0.9	12.93
	S(2)	1	LITHONIA LIGHTING	ALED2T78N/BL - RWLED2T78N/BL - - RWLED2T78SFN/BL - WPLED2T78N/BL (TYPE II)	CAST FINNED METAL HOUSING, 6 CIRCUIT BOARDS EACH WITH 1 LED. MOLDED 3-PIECE PLASTIC REFLECTOR WITH SPECULAR FINISH AND 1 APERTURE PER LED. CLEAR FLAT GLASS LENS IN CAST BROWN PAINTED METAL LENS FRAME.	SIX WHITE MULTI-CHIP LIGHT EMITTING DIODES (LEDS), TILTED 57-DEGREES FROM VERTICAL BASE-UP POSITION. ALED2T78N. ACTUAL PERFORMANCE MAY VARY. Sports, Street, Utility, Automotive, Hotel, Roadway Damp Location, Wet Location, Outdoor, Commercial	6	1586	0.9	79.5
	B	9	SUN VALLEY LIGHTING	B3300 SERIES LED	BBEL-CAP-IL-2ALED-NW 6-EXTRUSION VERTICAL POWER ARRAY (VPA) WITH 6 FROSTED DIFFUSE LENSES; INTERNAL STACKED LOUVERS WITH SPECULAR ALUMINUM FINISH; VPA & LOUVERS ENCLOSED BY CLEAR ACRYLIC LENS;	130 RATED LUMENS(85°C) PER LED AT 350MA;	24	61	1	26.4
	SIGN	1	KIM LIGHTING	CFL-WF-214K35	CFL	C-70-CRI DATA SHOWN IS ABSOLUTE.	1	3043	1	25.25

MOTE: ALL MOUNTING HEIGHTS LABELED ON PLAN.

PHOTOMETRICS AND FIXTURES PROVIDED BY EAST HILLS ENGINEERING ASSOCIATES, LLC.

Statistics						
Description	Symbol	Avg	Max	Min	Max/Min	Avg/Min
Calc Zone #1	+	0.4 fc	14.4 fc	0.0 fc	N/A	N/A

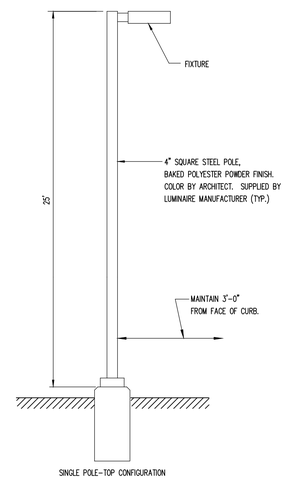

SITE LIGHTING POLE DETAIL

NOT TO SCALE

EXISTING FEATURES LEGEND

- Existing Curbing
- Existing Contours (1's)
- Existing Contours (5's)
- Existing Underground Electric
- Existing Overhead Utility Line w/ Pole
- Existing Concrete Areas
- Existing Vinyl/Wooden Fence
- Existing Light Pole/Standard

SURVEY FEATURES LEGEND

- Property Line, Lot Line or Right of Way Line
- Adjoining Property Line
- Building Setback Line
- Easement Line
- Roadway Center Line
- I.P. Found

PROPOSED FEATURES LEGEND

- PROPOSED BUILDING
- PROPOSED CURBING
- PROPOSED CURB TRANSITIONS
- PROPOSED UNDERGROUND ELECTRIC
- PROPOSED CONCRETE SIDEWALK
- PROPOSED CONCRETE AREAS
- PROPOSED PAVED AREAS (EXCEPT WALK/BIKE PATH)
- PROPOSED VINYL FENCE
- PROPOSED WOODEN FENCE
- PROPOSED RETAINING WALL
- S2 PROPOSED SIGN
- 5 PROPOSED PARKING STALL COUNT
- PROPOSED TRAFFIC FLOW ARROWS
- PROPOSED PAINTED HANDICAPPED PARKING SYMBOL
- VAN PROPOSED PAINTED HANDICAPPED PARKING SYMBOL (VAN)
- DC PROPOSED DEPRESSED CURB AREA
- PROPOSED PAINTED SITE CROSSWALK (ACCESSIBLE ROUTE)
- PROPOSED HANDICAPPED RAMP

PENNSYLVANIA ONE CALL SYSTEM, INC. 1-800-242-1776 STOP-CALL BEFORE YOU DIG!

BEFORE YOU DIG ANYWHERE IN PENNSYLVANIA ! CALL 1-800-242-1776 NON-MEMBERS MUST BE CONTACTED DIRECTLY

SOILS LEGEND

Soil cover on the site consists of:

HaB – Hagerstown Silt Loam, 3%-8% Slopes
No – Nolin Silt Loam, Local Alluvium, 0%-5% Slopes
OhB – Opequon-Hagerstown Complex, 3%-8% Slopes
OhC – Opequon-Hagerstown Complex, 8%-15% Slopes
OsD – Opequon-Rock Outcrop Complex, 8%-25% Slopes
URB – Urban Land-Hagerstown Complex, Gently Sloping

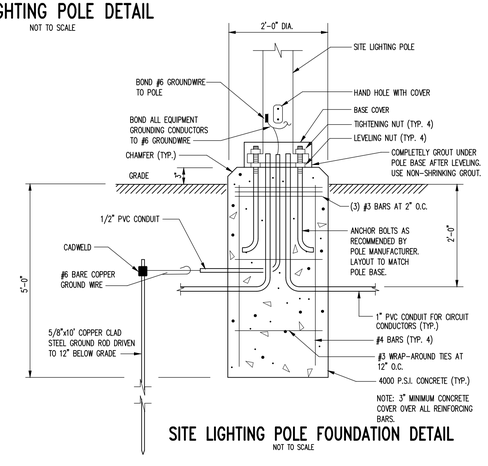

SITE LIGHTING POLE FOUNDATION DETAIL

NOT TO SCALE

PennTerra ENGINEERING INC.

CENTRAL PENNSYLVANIA REGION OFFICE:
3075 ENTERPRISE DRIVE
SUITE 100
STATE COLLEGE, PA 16801
PH: 814–231–8285
Fax: 814–237–2308

LANCASTER REGION OFFICE:
3904 B ABEL DRIVE
COLUMBIA, PA 17512
PH: 717–522–5031
Fax: 717–522–5046

WWW.PENNTERRA.COM

COPYRIGHT 2019 BY THE ENGINEER
THE INFORMATION CONTAINED HEREON MAY NOT BE USED OR COPIED IN ANY MANNER WITHOUT THE WRITTEN PERMISSION OF THE ENGINEER EXCEPT AS OTHERWISE PROVIDED BY APPROPRIATE LAWS OR STATUES.
© PENNTERRA ENGINEERING 2019 ALL RIGHTS RESERVED

COMMONWEALTH OF PENNSYLVANIA REGISTERED PROFESSIONAL JOHN C. SEPP ENGINEER 040003–E

Seal

Seal

Designer RRK
Draftsman JDB
Proj.Manager JCS
Surveyor ----
Perimeter Ck.
Book ---- Pg ----
Drive Layout 16094–09–LT
Acad LIGHTING–24'X36'

Date	Description
12–3–19 MLH	REVISED PER TWP COMMENTS
11–1–19 MLH	REVISED PER TWP COMMENTS

REVISIONS

WEST CHERRY LANE MULTI USE BUILDING

FERGUSON TOWNSHIP
CENTRE COUNTY
PENNSYLVANIA

PRELIMINARY/FINAL LAND DEVELOPMENT PLAN

LIGHTING PLAN

PROJECT NO. 16094.01
DATE SEPTEMBER 12, 2019
SCALE 1"=20'
SHEET NO. 9

P:\sdpro\2016\16094\dwg\plot files\final plans\FINAL PLANS - REVISED\16094-09-LT.dwg, 12/4/2019 11:49:55 AM, 1:1

PROPOSED STORM DRAINAGE STRUCTURE DATA

ID	STRUCTURE TYPE	TG ELEV	INVERT IN	FROM	INVERT OUT	PIPE RUN		LENGTH (FT)	SIZE (IN)	SLOPE (%)
	48" UNDERGROUND BASIN		1107.67 1106.00	YD-1 I-1						
I-1	24" X 48" Precast Type C Inlet w/ Bicycle Safe Grate	1112.00	1107.00 1107.00	I-2 I-5	1107.00	I-1 TO BASIN	HDPEP	37.80	15	2.09
I-2	24" X 48" Precast Type C Inlet w/ Bicycle Safe Grate	1110.50			1107.25	I-2 TO I-1	HDPEP	32.70	15	0.76
I-5	24" X 48" Precast Type C Inlet w/ Bicycle Safe Grate	1112.00	1109.50	YD-3	1108.50	I-5 TO I-1	HDPEP	67.50	15	2.22
EX-1	Existing 2x4 Inlet		1094.60	I-3						
I-3	24" X 48" Precast Type M Inlet w/ Bicycle Safe Grate	1100.35	*1097.45* 1097.45 1098.00	*EX-2* FD	1097.30	I-3 TO EX-1	HDPEP	137.10	12	1.97
I-4	24" X 48" Precast Type M Inlet w/ Bicycle Safe Grate	1110.50	1104.10	OS-1	1104.00	I-4 TO I-3	HDPEP	106.40	12	6.16
OS-1	48" x 72" Precast Inlet Box w/ 24" X 48" Precast Type M Inlet w/ Bicycle Safe Grate	1112.60	1106.00	UG BASIN	1106.00	OS-1 TO I-4	HDPEP	11.70	12	16.24
I-6	48" x 72" Precast Inlet Box w/ 24" X 48" Precast Type M Inlet w/ Bicycle Safe Grate	1113.36	1110.60 1106.00	8" RD UG BASIN	1106.00	I-6 TO OS-1	HDPEP	59.50	48	0.00
YD-1	12" Inline Drain	1113.00	1111.00	YD-2	1111.00	YD-1 TO BASIN	PVC	21.20	8	15.70
YD-2	12" Drain Basin	1113.00	1111.50	6" RD	1111.50	YD-2 TO YD-1	PVC	33.30	8	1.50
YD-3	12" Inline Drain	1113.00	1110.80 1110.80	YD-4 6" RD	1110.80	YD-3 TO I-5	PVC	66.00	8	1.96
YD-4	12" Drain Basin	1113.00	1111.50	6" RD	1111.50	YD-4 TO YD-3	PVC	51.30	8	1.36

NOTES: ALL ROOF DRAINS SHALL BE 8" PVC SET AT A MINIMUM COVER OF 1' IN LAWN AREAS AND 1.5' IN PAVEMENT/CONCRETE AND MINIMUM SLOPE OF 0.5%.

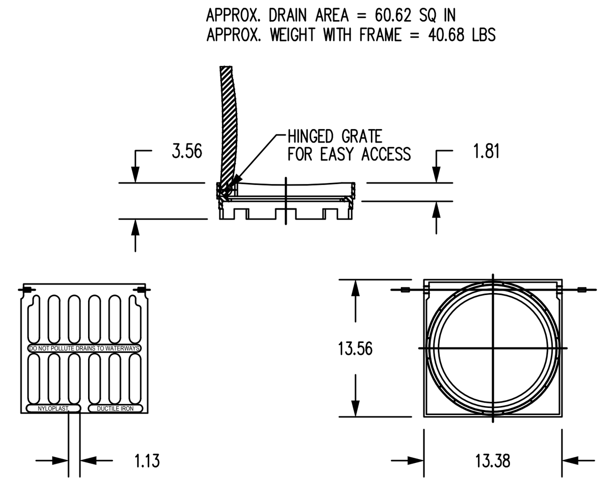

DIMENSIONS ARE FOR REFERENCE ONLY ACTUAL DIMENSIONS MAY VARY DIMENSIONS ARE IN INCHES GRATE MEETS H-20 LOAD RATING QUALITY: MATERIALS SHALL CONFORM TO ASTM A536 GRADE 70-50-05 PAINT: CASTINGS ARE FURNISHED WITH A BLACK PAINT LOCKING DEVICE AVAILABLE UPON REQUEST SEE DRAWING NO. 7001-110-035

Nyloplast

12" STANDARD GRATE ASSEMBLY (YD1-YD4)

NOT TO SCALE

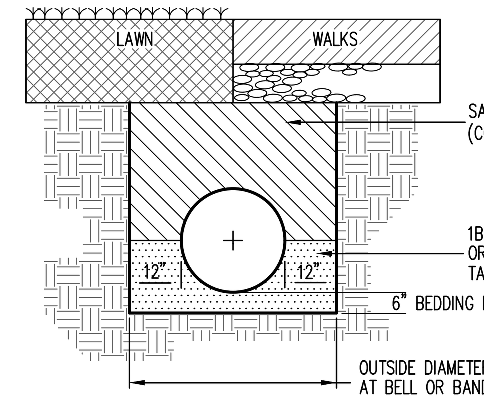

NOTES:

1. EXCAVATE THE TRENCH TO THE WIDTH OF THE OUTSIDE DIAMETER OF THE PIPE + 2' AND CREATE AN APPROPRIATE BEDDING 6" DEEP.
2. AT UNPAVED AREAS SUTABLE MATERIAL MAY BE UTILIZED THE ENTIRE DEPTH OF TRENCH (LESS 6" TOPSOIL). PLACEMENT AND COMPACTION TO BE AS NOTED FOR PAVED AREAS.
3. ALL STORM SEWER PIPE IS TO BE HIGH-DENSITY POLYETHYLENE (HDPE) AND HAVE A SMOOTH LINED INTERIOR WITH WATER-TIGHT JOINTS.
4. SATISFACTORY FILL MATERIAL: SOILS MEETING ASTM D2487 SOIL CLASSIFICATION GROUPS GW, GC, GM, SW, SC, SM, AND CL WITH LIQUID LIMIT NOT GREATER THAN 35, OR A COMBINATION OF THESE GROUPS; FREE OF ROCK OR GRAVEL LARGER THAN 3 INCHES IN ANY DIMENSION, DEBRIS, WASTE, FROZEN MATERIALS, VEGETATION, AND OTHER DELETERIOUS MATTER; WITHIN 3% OF OPTIMUM MOISTURE CONTENT. (INCLUDES 2A)
5. PLACE SATISFACTORY FILL MATERIAL IN LAYERS 8" THICK MAX. COMPACT TO 100% SPD.
6. OWNER WILL ENGAGE A QUALIFIED INDEPENDENT GEOTECHNICAL ENGINEERING TESTING AGENCY TO PERFORM FIELD QUALITY ASSURANCE TESTING. NOTIFY TESTING AGENCY AT LEAST 48 HOURS PRIOR TO FILL PLACEMENT ACTIVITIES. ALLOW TESTING AGENCY TO INSPECT AND TEST SUBGRADES AND EACH FILL OR BACKFILL LAYER. PROCEED WITH SUBSEQUENT EARTHWORK ONLY AFTER TEST RESULTS FOR PREVIOUSLY COMPLETED WORK COMPLY WITH REQUIREMENTS.

STORMSEWER (HDPE) INSTALLATION

NOT TO SCALE

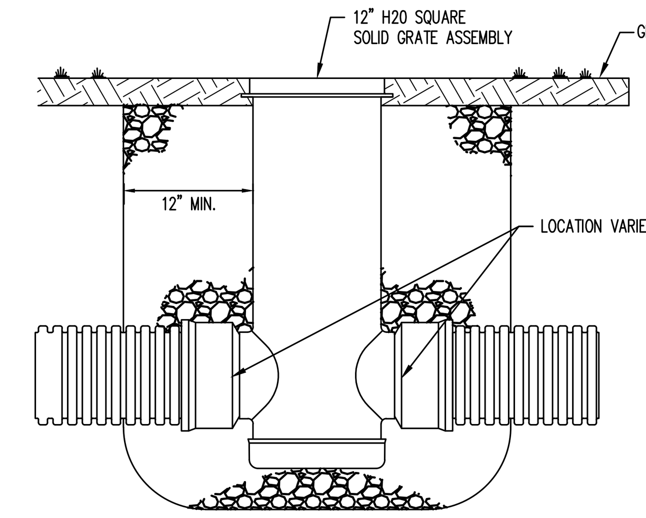

Nyloplast

NYLOPLAST YARD DRAIN BASIN

(YD-1 & YD-3)

NOT TO SCALE

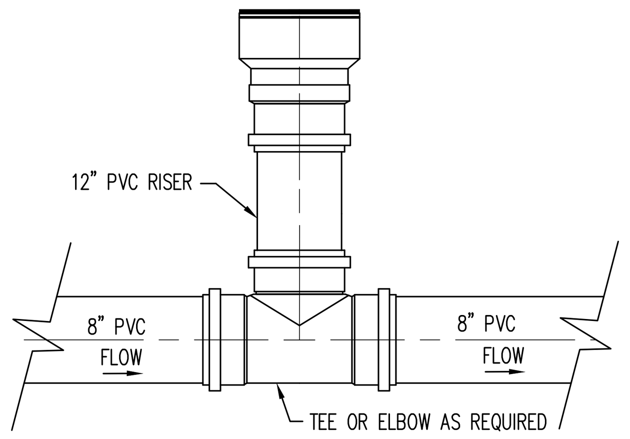

INLINE YARD DRAIN DETAIL

(YD-2 & YD-4)

NOT TO SCALE

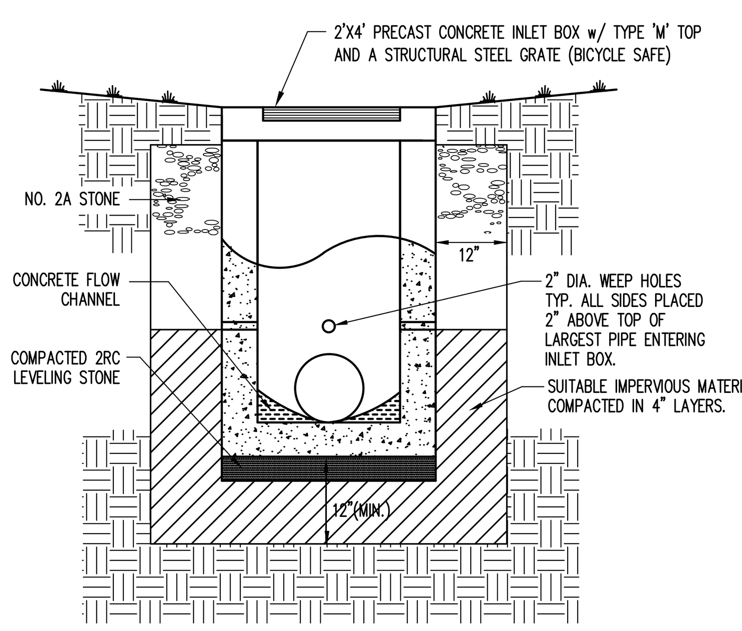

NOTE

Any Type 'M' Inlet exceeding 4' in depth is required to have steps installed.

TYPE 'M' PRECAST CONCRETE INLET

NOT TO SCALE

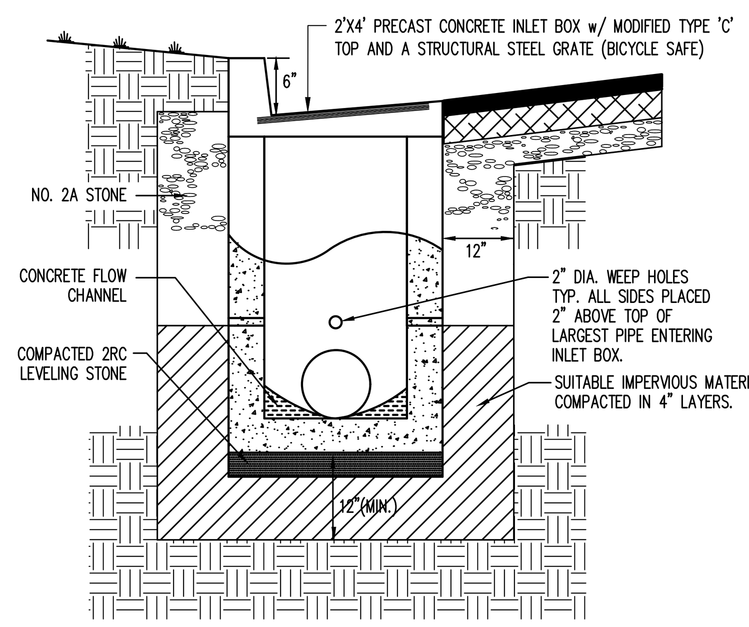

NOTE

Any Type 'C' Inlet exceeding 4' in depth is required to have steps installed.

MODIFIED TYPE 'C' PRECAST CONCRETE INLET

NOT TO SCALE

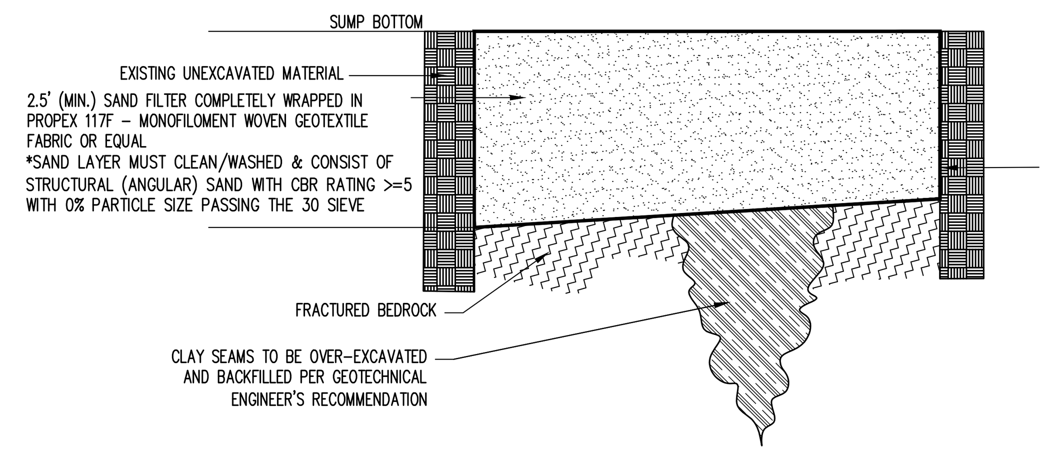

NOTES:
1. CONSULTATION WITH THE PROJECT GEOTECHNICAL CONSULTANT IS REQUIRED PRIOR TO IMPLEMENTATION OF THIS DETAIL.

ROCK OVER-EXCAVATION DETAIL

NOT TO SCALE

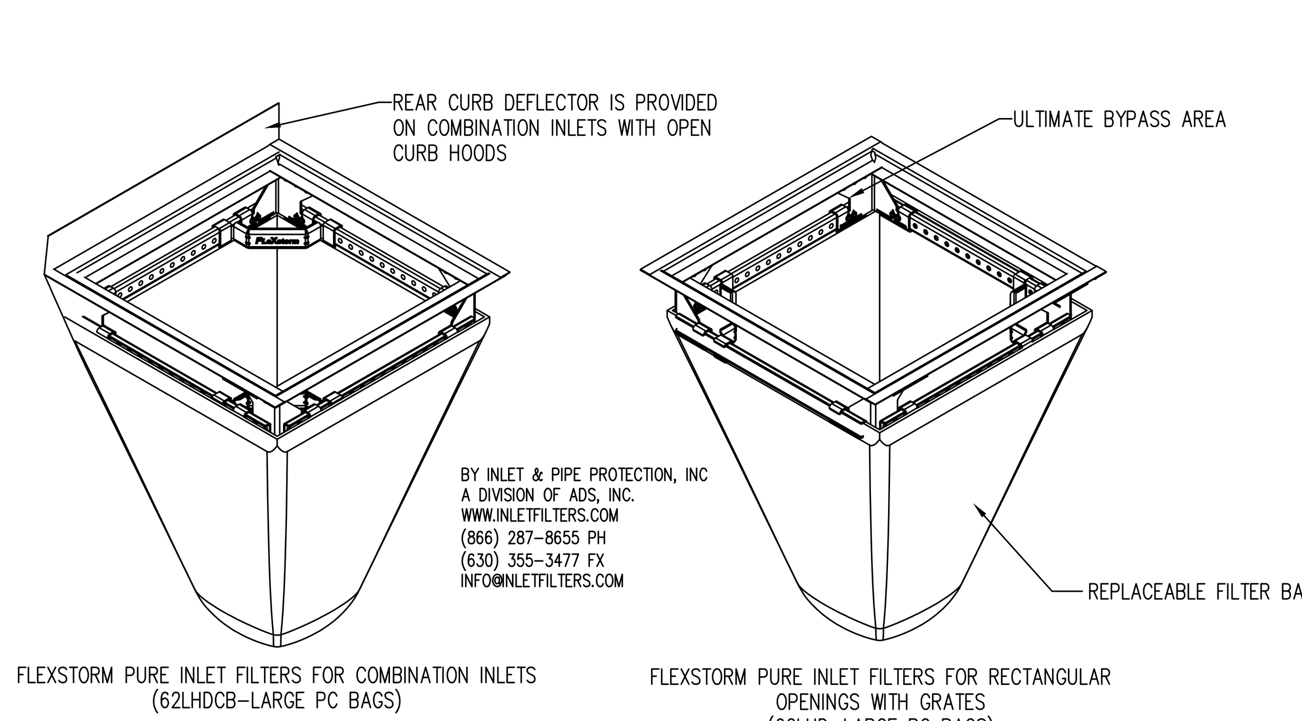

FLEXSTORM PURE INLET FILTERS

(INSTALLED IN INLETS I-1, I-2 & I-5)

NOT TO SCALE

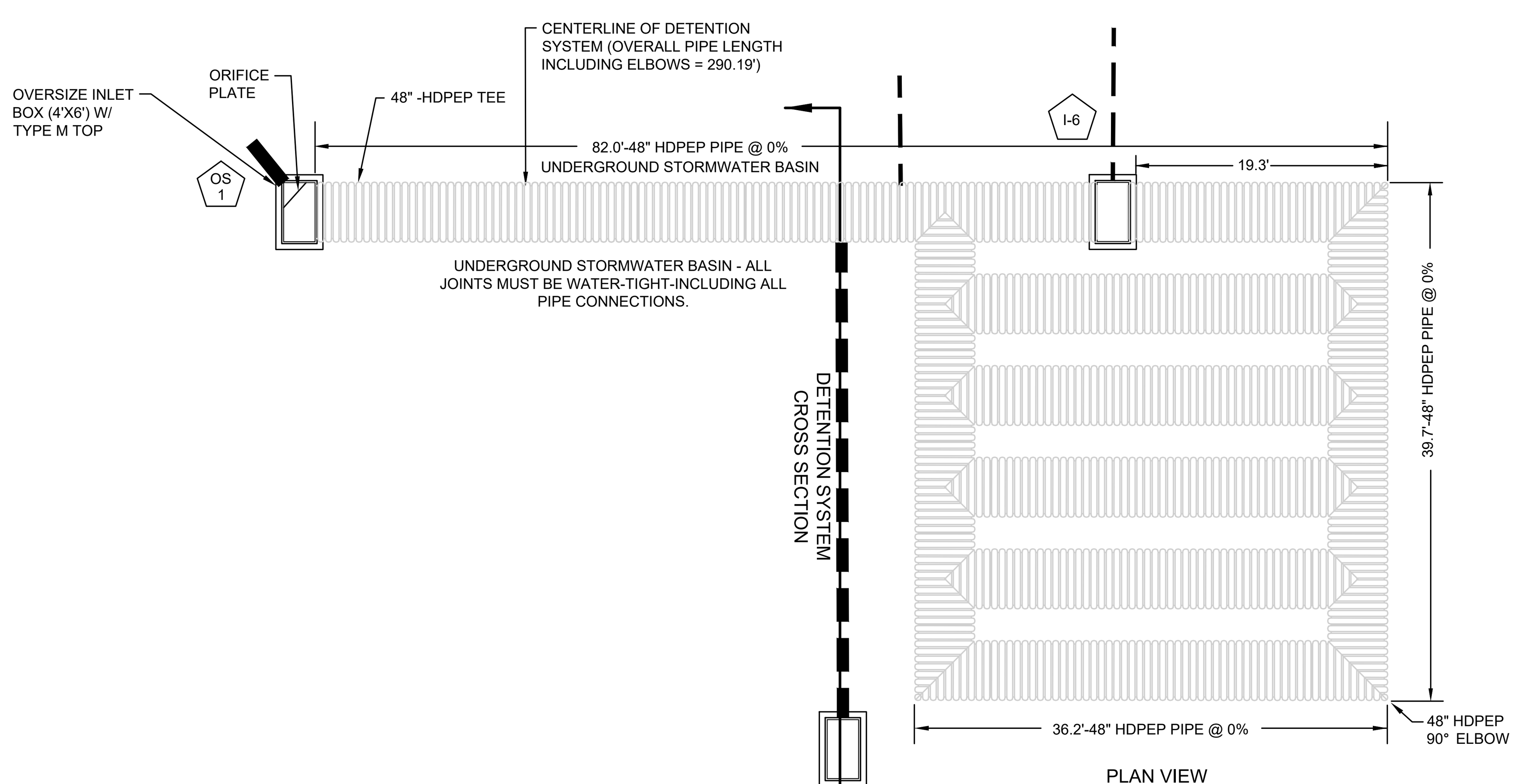

48" HDPE DETENTION BASIN

NOT TO SCALE

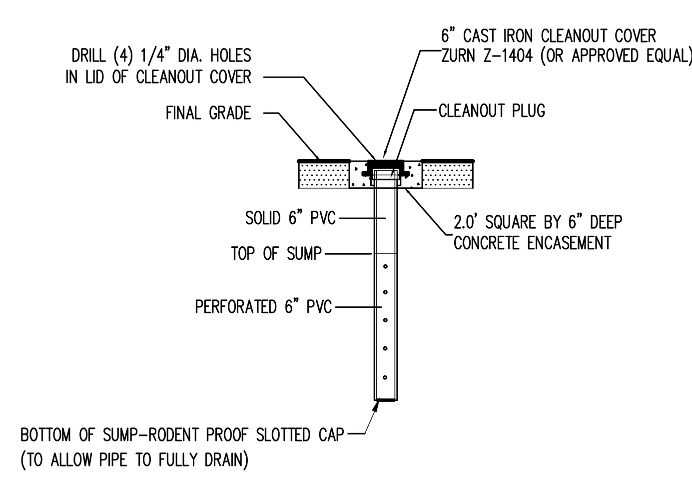

SUMP OBSERVATION PORT

NOT TO SCALE

FLANGED BALL VALVE DETAIL

NOT TO SCALE

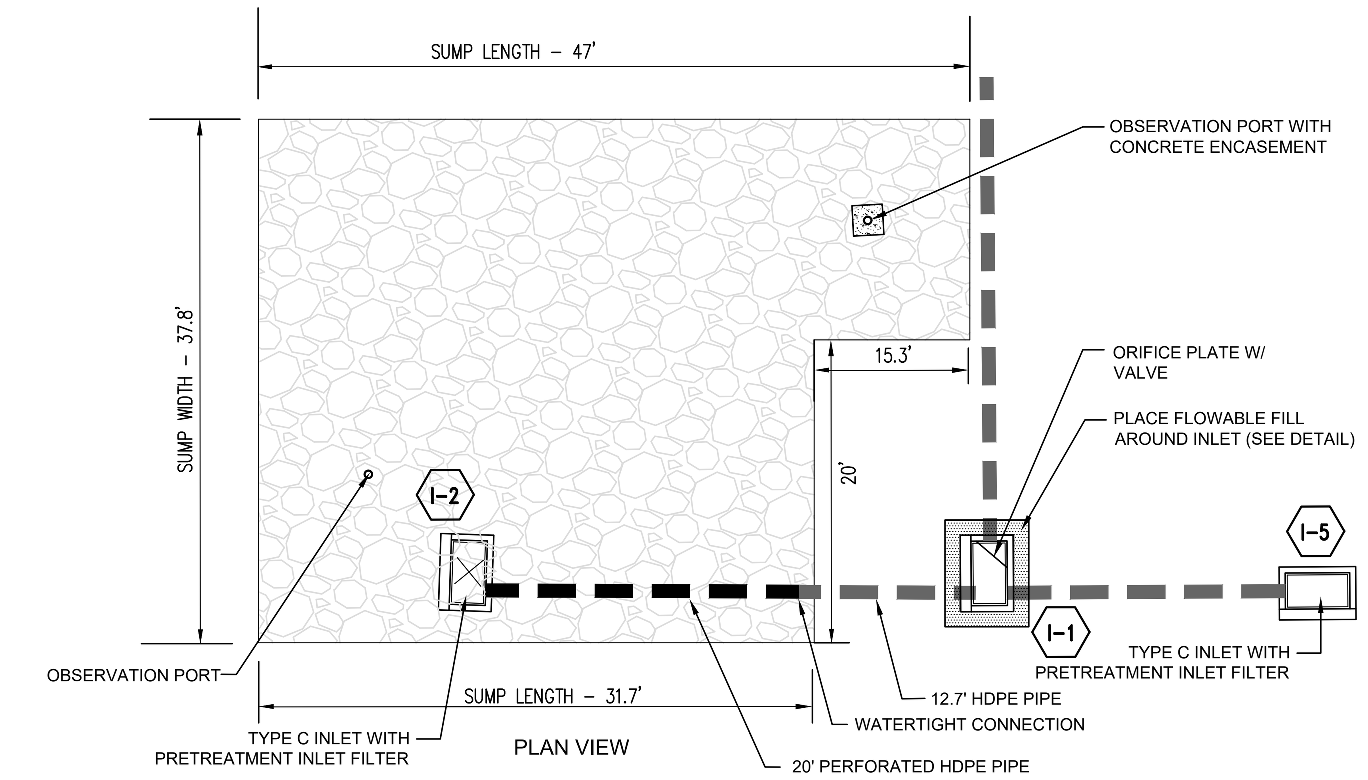

NOTE

A 2.5' separation from the sump bottom and rock must be maintained. Refer to the Rock-Over Excavation Detail, if rock encountered at a depth less than 2.5' from the sump bottom.

INFILTRATION SUMP DETAIL

NOT TO SCALE

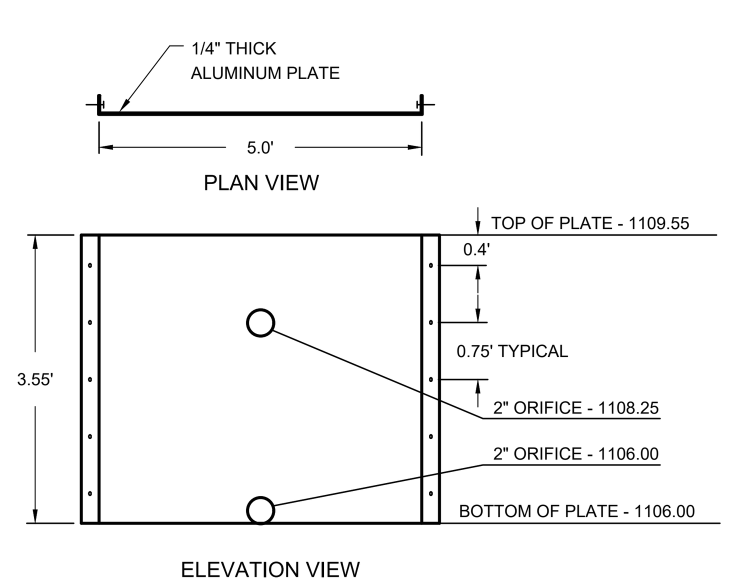

DETENTION BASIN ORIFICE PLATE (OS-1)

NOT TO SCALE

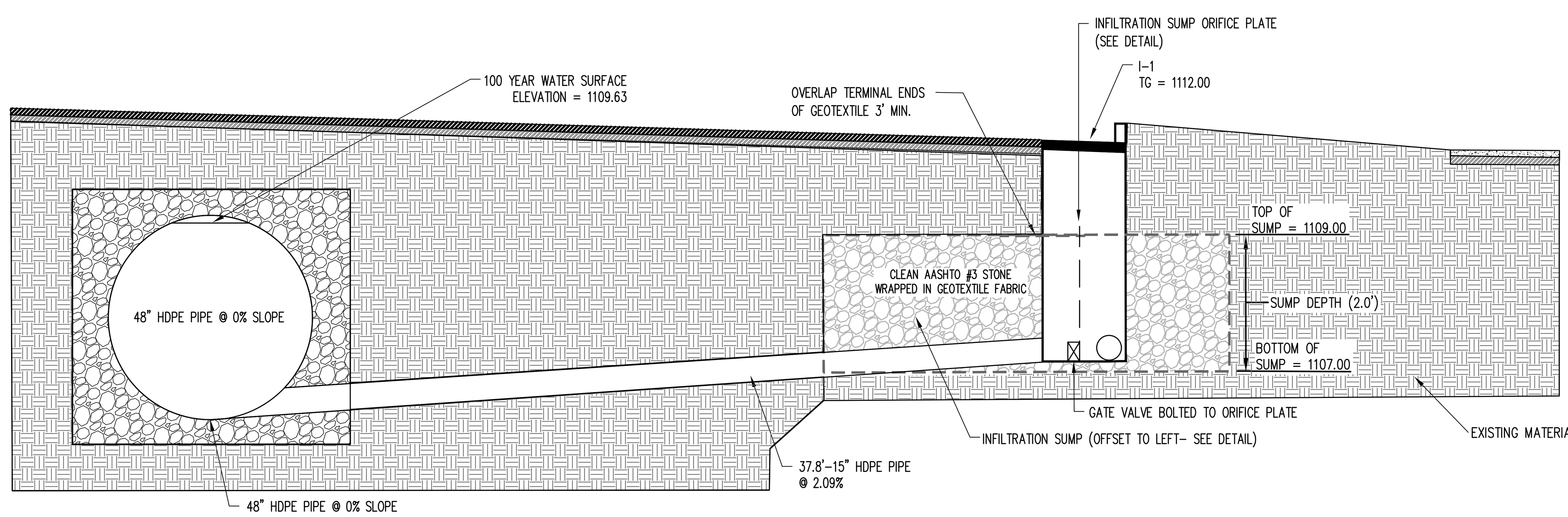

DETENTION SYSTEM CROSS SECTION

NOT TO SCALE

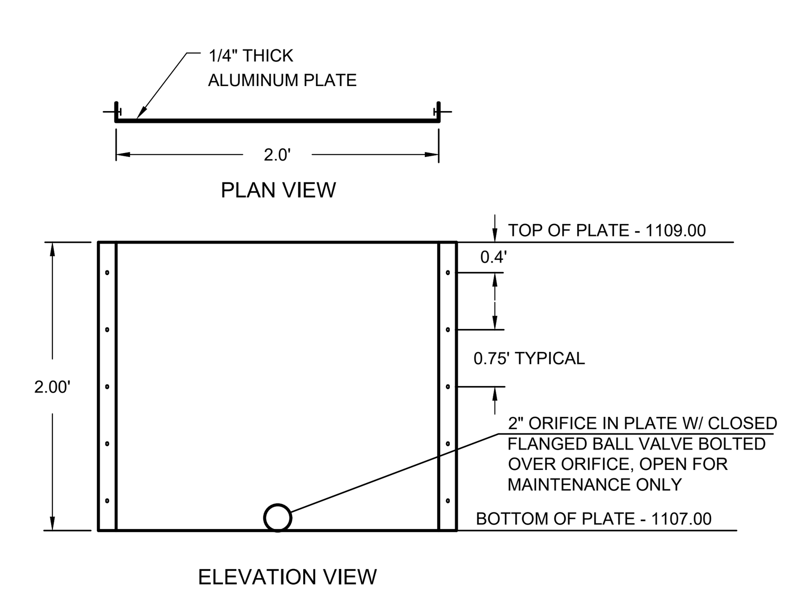

INFILTRATION SUMP ORIFICE PLATE (I-1)

NOT TO SCALE

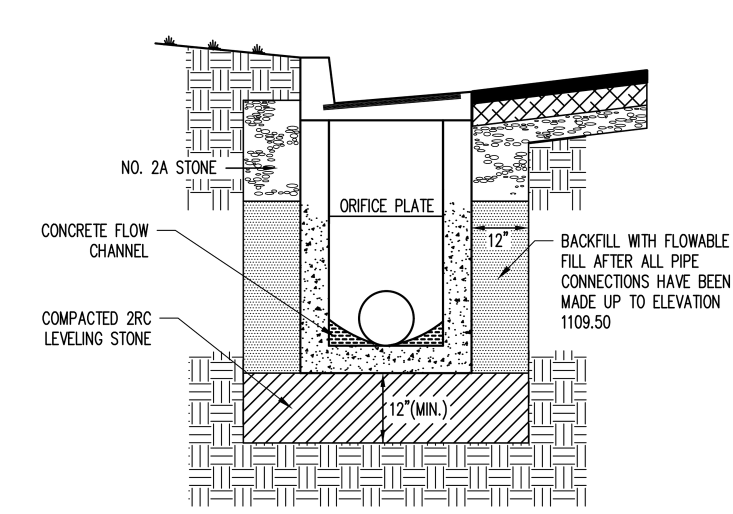

INLET (I-1) BACKFILL DETAIL

NOT TO SCALE

PennTerra ENGINEERING INC.

CENTRAL PENNSYLVANIA REGION OFFICE:
3075 ENTERPRISE DRIVE
SUITE 100
STATE COLLEGE, PA 16801
PH: 814-231-8285
Fax: 814-237-2308

LANCASTER REGION OFFICE:
3904 B ABEL DRIVE
COLUMBIA, PA 17512
PH: 717-522-5031
Fax: 717-522-5046

WWW.PENNTERRA.COM

COPYRIGHT 2019 BY THE ENGINEER
THE INFORMATION CONTAINED HEREON MAY NOT BE USED OR COPIED IN ANY MANNER WITHOUT THE WRITTEN PERMISSION OF THE ENGINEER EXCEPT AS OTHERWISE PROVIDED BY APPROPRIATE LAWS OR STATUTES.
© PENNTERRA ENGINEERING 2019 ALL RIGHTS RESERVED

COMMONWEALTH OF PENNSYLVANIA REGISTERED PROFESSIONAL JOHN C. SEPP ENGINEER 040003-E

Seal

Seal

Designer RRK
Draftsman JDB
Proj.Manager JCS
Surveyor ----
Perimeter Ck.
Book ---- Pg ----
Drive Layout 16094-10-SWM-DETAILS
Acad SWM DETAILS-24'X36'

Date	Description
12-3-19 MLH	REVISED PER TWP COMMENTS
11-1-19 MLH	REVISED PER TWP COMMENTS

REVISIONS

WEST CHERRY LANE MULTI USE BUILDING

FERGUSON TOWNSHIP
CENTRE COUNTY
PENNSYLVANIA

PRELIMINARY/FINAL LAND DEVELOPMENT PLAN

STORMWATER CONSTRUCTION DETAILS

PROJECT NO. 16094.01

DATE SEPTEMBER 12, 2019

SCALE N.T.S.

SHEET NO. 10

P:\ddtproj\2016\16094\dwg\plot files\final plans\FINAL PLANS - REVISED\16094-10-SWM-DETAILS.dwg, 12/4/2019 11:50:25 AM, 1:1

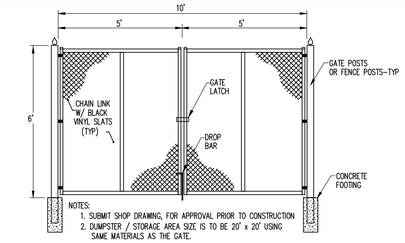

NOTES:
1. SUBMIT SHOP DRAWING, FOR APPROVAL PRIOR TO CONSTRUCTION
2. DUMPSTER / STORAGE AREA SIZE IS TO BE 20' x 20' USING SAME MATERIALS AS THE GATE.

DUMPSTER SCREENING & GATE DETAIL
NOT TO SCALE

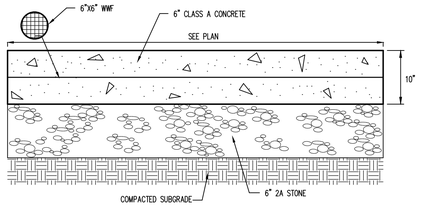

DUMPSTER PAD DETAIL
NOT TO SCALE

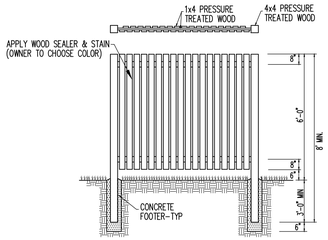

DUMPSTER SCREENING FENCE DETAIL
NOT TO SCALE

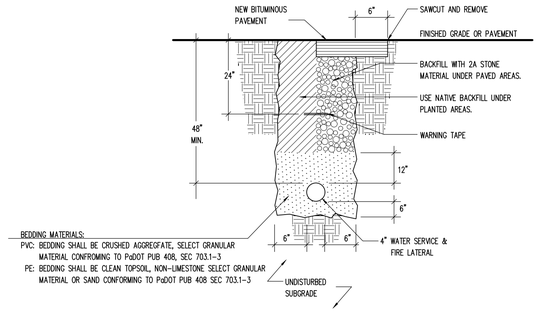

WATER LATERALS TRENCH DETAIL
NOT TO SCALE

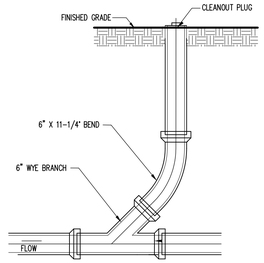

6" SANITARY SEWER CLEAN-OUT DETAIL (LAWN AREAS)
NOT TO SCALE

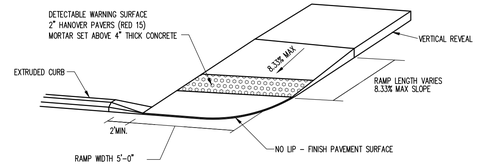

MONOLITHIC SIDEWALK HANDICAP RAMP DETAIL (NORTH ALLEN)
NOT TO SCALE

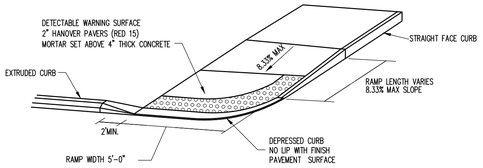

HANDICAP RAMP DETAIL
NOT TO SCALE

PAINTED STOP BAR
NOT TO SCALE

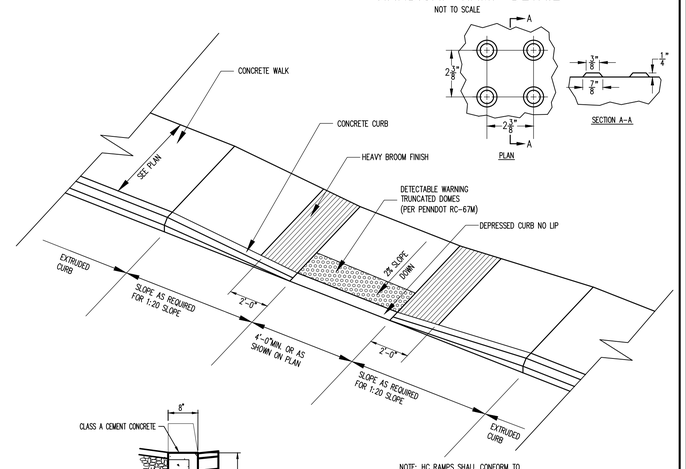

NOTE: HC RAMPS SHALL CONFORM TO ADA CRITERIA

HANDICAP ACCESS RAMP
NOT TO SCALE

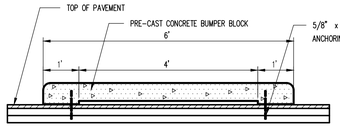

CONCRETE BUMPER BLOCK
NOT TO SCALE

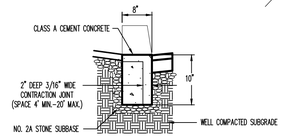

DEPRESSED CONCRETE CURB (TOWNSHIP R-O-W)
NOT TO SCALE

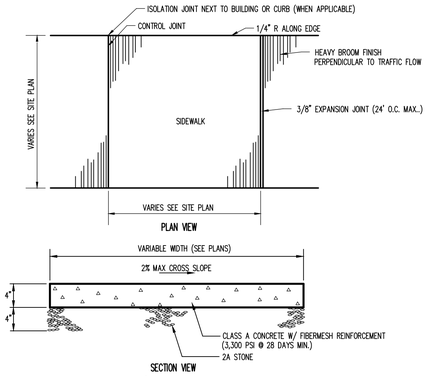

NOTE: CONTROL JOINTS 5' MAX. SPACING, FULL DEPTH EXPANSION JOINTS AT SOLID STRUCTURES, CURB AND BEGINNING AND END OF WORKING DAY.

CEMENT CONCRETE SIDEWALK (TOWNSHIP R-O-W)
NOT TO SCALE

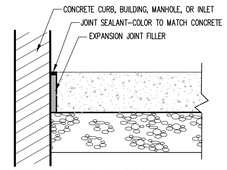

NOTES: INSTALL ISOLATION JOINTS FOR CONCRETE SIDEWALKS AT ABUTTING WALLS, CURBS, & BUILDING WALLS & COLUMN.
REFER TO STRUCTURAL DRAWINGS & DETAILS FOR CONCRETE PAVEMENT AT PROPOSED BUILDINGS ENTRANCES.
INSTALL ISOLATION JOINTS AT ABUTTING WALLS, CURBS, & BUILDING WALLS.
USE 3/8" ISOLATION JOINTS & 1/2" DOWELS FOR SIDEWALKS

CONCRETE ISOLATION JOINT
NOT TO SCALE

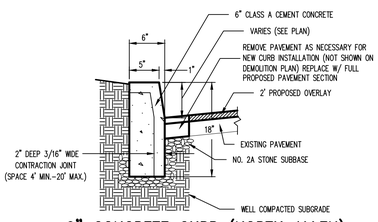

6" CONCRETE CURB (NORTH ALLEN)
NOT TO SCALE

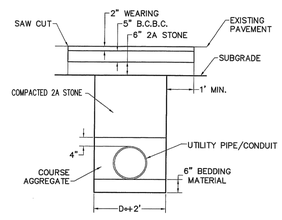

TRENCHING DETAIL

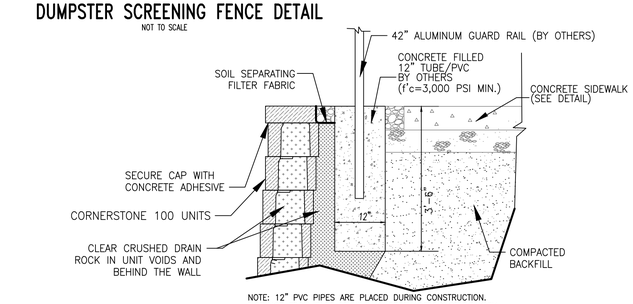

NOTE: 12" PVC PIPES ARE PLACED DURING CONSTRUCTION. DISTANCE FROM FACE OF WALL & DEPTH OF SONOTUBE VARY
WIND LOADS AND LATERAL LOADS HAVE NOT BEEN CONSIDERED.
COSULT A QUALIFIED ENGINEER

RAILING INSTALLATION DETAIL
NOT TO SCALE

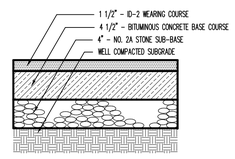

NOTES:
1. ID-2 WEARING COURSE CAN BE REPLACED WITH: SUPERPAVE 9.5MM WEARING COURSE, PG 64-22, SRL-L, < 0.3 MILLION ESASLS, 50 GYRATION.
2. BCBC BASE COURSE CAN BE REPLACED WITH: SUPERPAVE 25MM BASE COURSE, PG 64-22, < 0.3 MILLION ESASLS, 50 GYRATION.

PARKING LOT & DRIVEWAY ENTRANCE PAVEMENT SECTION
NOT TO SCALE

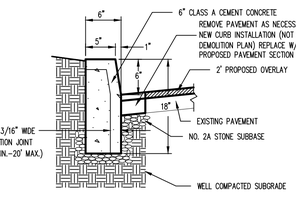

6" CONCRETE CURB (CHERRY LANE)
NOT TO SCALE

CONSTRUCTION PROCEDURE:

- EXCAVATE THE TRENCH TO THE WIDTH OF THE OUTSIDE DIAMETER OF THE PIPE (DIa) PLUS 2 FEET AND CREATE AN APPROPRIATE BEDDING 6 INCHES DEEP.
- PLACE 2B COARSE AGGREGATE MATERIAL (IN 8" LIFTS)
- ALL MATERIAL TO BE COMPACTED TO 100% OF THE DRY WEIGHT DENSITY.
- AT UNPAVED AREAS SUITABLE MATERIAL MAY BE UTILIZED THE ENTIRE DEPTH OF TRENCH (LESS 6" TOPSOIL). PLACEMENT AND COMPACTION TO BE AS NOTED FOR PAVED AREAS.
- SEAL EDGES OF PAVEMENT REPAIR WITH AC-20 OR APPROVED SEALANT

NOTES:
1. ID-2 WEARING COURSE CAN BE REPLACED WITH: SUPERPAVE 9.5MM WEARING COURSE, PG 64-22, SRL-L, < 0.3 MILLION ESASLS, 50 GYRATION.
2. BCBC BASE COURSE CAN BE REPLACED WITH: SUPERPAVE 25MM BASE COURSE, PG 64-22, < 0.3 MILLION ESASLS, 50 GYRATION.
3. SEAL JOINTS WITH PG 64-22.

STANDARD ROAD CUT AND PATCH (TRENCH) DETAIL (TOWNSHIP R-O-W)
NOT TO SCALE

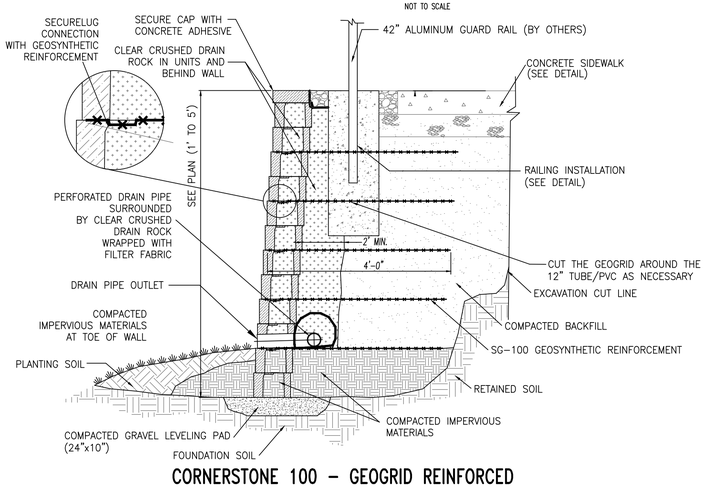

CORNERSTONE 100 - GEOGRID REINFORCED
NOT TO SCALE

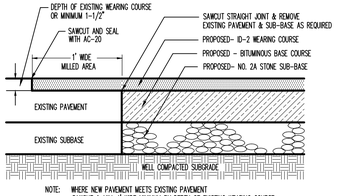

NOTE: WHERE NEW PAVEMENT MEETS EXISTING PAVEMENT SAWCUT & MILL 1' WIDE MINIMUM BY DEPTH OF EXISTING WEARING COURSE

PAVEMENT NOTCH DETAIL
NOT TO SCALE

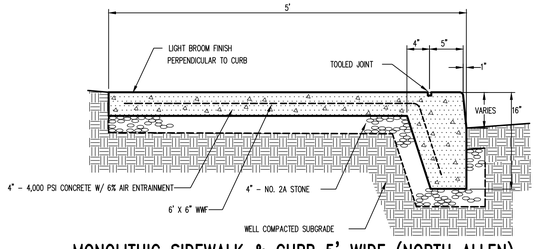

MONOLITHIC SIDEWALK & CURB 5' WIDE (NORTH ALLEN)
NOT TO SCALE

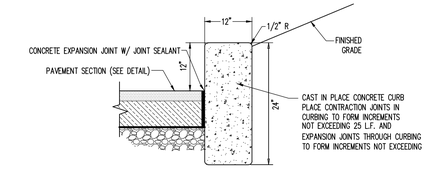

ON-SITE CONCRETE CURB
NOT TO SCALE

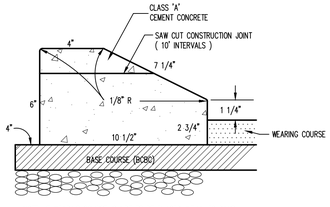

NOTE: IF WEARING COURSE IS NOT TO BE PLACED WITHIN 30 DAYS, SEAL ALONG THE CURB AND ROAD SURFACE WITH PG 64-22.

EXTRUDED CONCRETE CURB DETAIL
NOT TO SCALE

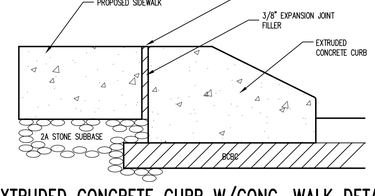

EXTRUDED CONCRETE CURB W/CONC. WALK DETAIL
NOT TO SCALE

PennTerra ENGINEERING INC.

CENTRAL PENNSYLVANIA REGION OFFICE:
3075 ENTERPRISE DRIVE
SUITE 100
STATE COLLEGE, PA 16801
PH: 814-231-8285
Fax: 814-237-2308

LANCASTER REGION OFFICE:
3904 B ABEL DRIVE
COLUMBIA, PA 17512
PH: 717-522-5031
Fax: 717-522-5046

WWW.PENNTERRA.COM

COPYRIGHT 2019 BY THE ENGINEER
THE INFORMATION CONTAINED HEREON MAY NOT BE USED OR COPIED IN ANY MANNER WITHOUT THE WRITTEN PERMISSION OF THE ENGINEER EXCEPT AS OTHERWISE PROVIDED BY APPROPRIATE LAWS OR STATUTES.
© PENNTERRA ENGINEERING 2019 ALL RIGHTS RESERVED

COMMONWEALTH OF PENNSYLVANIA REGISTERED PROFESSIONAL JOHN C. SEPP ENGINEER 040003-E
Seal

Designer RRK
Draftsman JDB
Proj.Manager JCS
Surveyor ----
Perimeter Ck.
Book ---- Pg ----
Drive Layout 16094-11-CNSTR-DETAILS
Acad CNSTR DETAILS-24'X36'

Date	Description
12-3-19 MLH	REVISED PER TWP COMMENTS
11-1-19 MLH	REVISED PER TWP COMMENTS

REVISIONS

WEST CHERRY LANE MULTI USE BUILDING

FERGUSON TOWNSHIP
CENTRE COUNTY
PENNSYLVANIA

PRELIMINARY/FINAL LAND DEVELOPMENT PLAN

GENERAL CONSTRUCTION DETAILS

PROJECT NO. 16094.01
DATE SEPTEMBER 12, 2019
SCALE N.T.S.
SHEET NO. 11

P:\ldd\proj\2016\16094\dwg\plot files\final plans\FINAL PLANS - REVISED\16094-11-CNSTR-DETAILS.dwg, 12/4/2019 11:50:41 AM, 1:1

EXISTING SIGN 'A'
NOT TO SCALE
STEP BY STEP WALL SIGN
2.90' HEIGHT
20.30 SF
MATERIAL: PLASTIC

EXISTING SIGN 'B'
NOT TO SCALE
DIRECTIONAL SIGN
4.70' HEIGHT
6.45 SF
MATERIAL: PLASTIC/METAL

EXISTING SIGN 'C'
NOT TO SCALE
COMFORT SUITES WALL SIGN
5.35' HEIGHT
59.76 SF
MATERIAL: PLASTIC/METAL

EXISTING SIGN 'D'
NOT TO SCALE
SLEEP INN WALL SIGN
7.20' HEIGHT
47.66 SF
MATERIAL: PLASTIC/METAL

EXISTING SIGN 'E'
NOT TO SCALE
GROUND POLE SIGNS
24.20' HEIGHT
MATERIAL: PLASTIC/METAL

EXISTING SIGN 'F'
NOT TO SCALE
SLEEP INN WALL SIGN
10.35' HEIGHT
98.64 SF
MATERIAL: PLASTIC/METAL

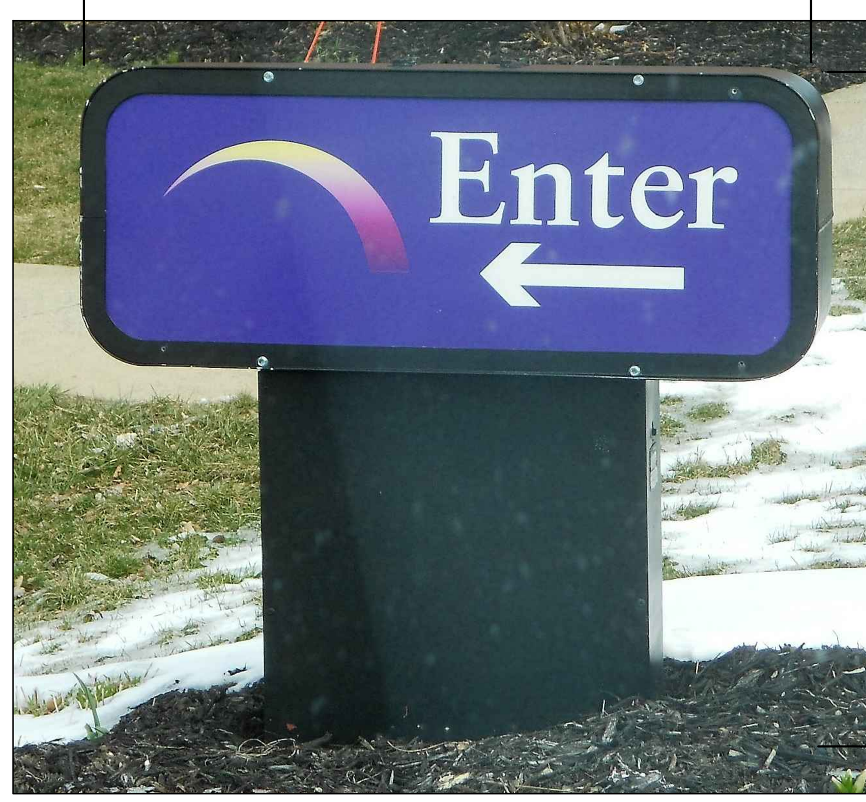

EXISTING SIGN 'G'
NOT TO SCALE
DIRECTIONAL SIGN
3.05' HEIGHT
3.88 SF
MATERIAL: PLASTIC/METAL

EXISTING SIGN 'H'
NOT TO SCALE
T.G.I FRIDAY'S WALL SIGN
5.50' HEIGHT
43.73 SF
MATERIAL: PLASTIC/METAL

EXISTING SIGN 'I'
NOT TO SCALE
T.G.I. FRIDAY'S WALL SIGN
3.62' HEIGHT
38.12 SF
MATERIAL: PLASTIC

EXISTING SIGN 'J'
NOT TO SCALE
VALVOLINE INSTANT OIL CHANGE SIGN
2.5' HEIGHT
60 SF
MATERIAL: PLASTIC/METAL

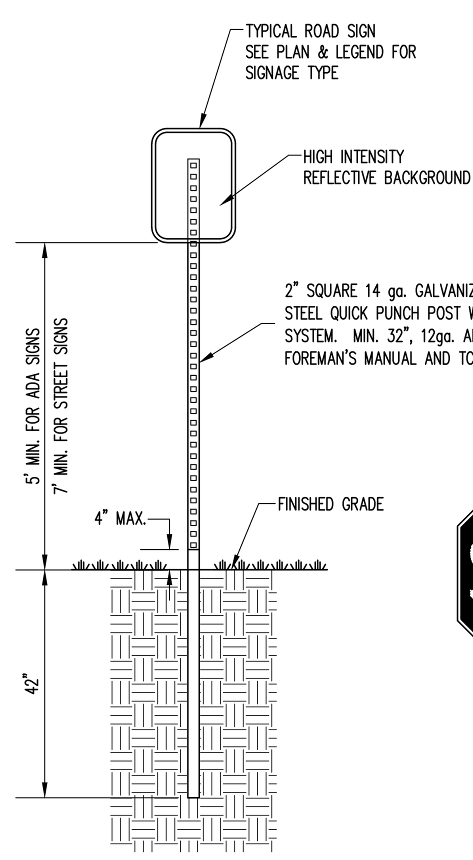

NOTES:
1. MOUNT SIGN AT RIGHT ANGLE TO DIRECTION OF TRAFFIC FLOW.
2. PROVIDE A MINIMUM CLEARANCE OF TWO FOOT FROM FACE OF CURB.
3. PARKING RESTRICTION SIGNS TO BE MOUNTED BETWEEN 30 AND 45 DEGREES OF LINE OF TRAFFIC FLOW.

SIGN POST DETAIL
NOT TO SCALE

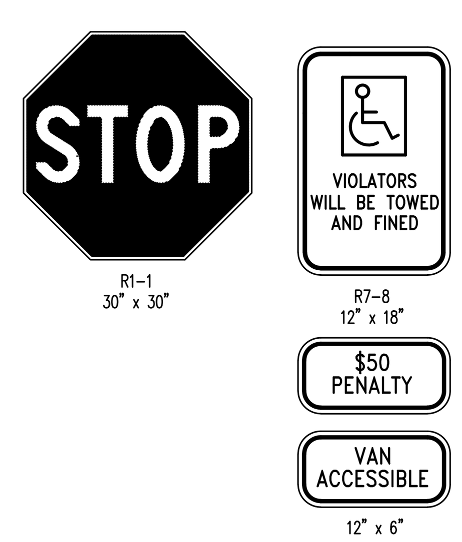

STREET SIGN DETAILS
NOT TO SCALE

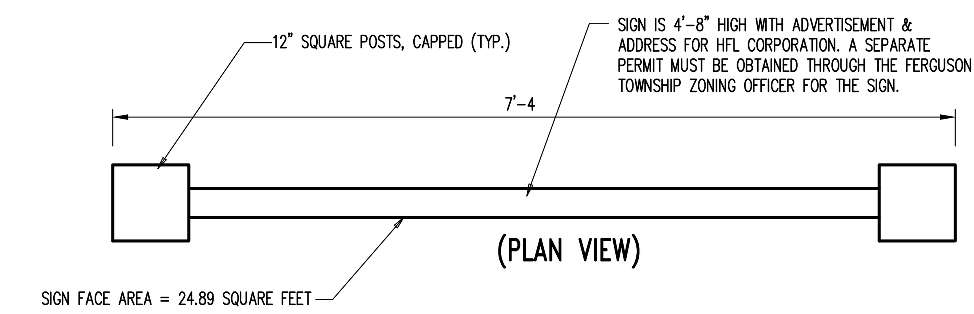

PROPOSED HFL CORPORATION ENTRANCE SIGN
NOT TO SCALE

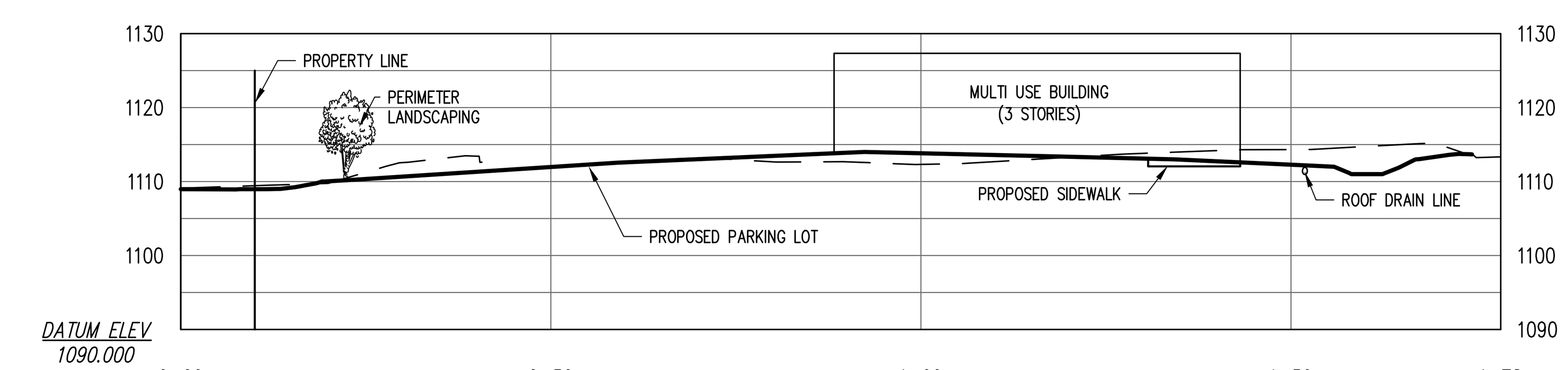

SITE CROSS SECTION B-B (SOUTH FRONT YARD TO NORTH FRONT YARD)
SCALE:
VERTICAL: 1" = 5'
HORIZONTAL: 1" = 20'

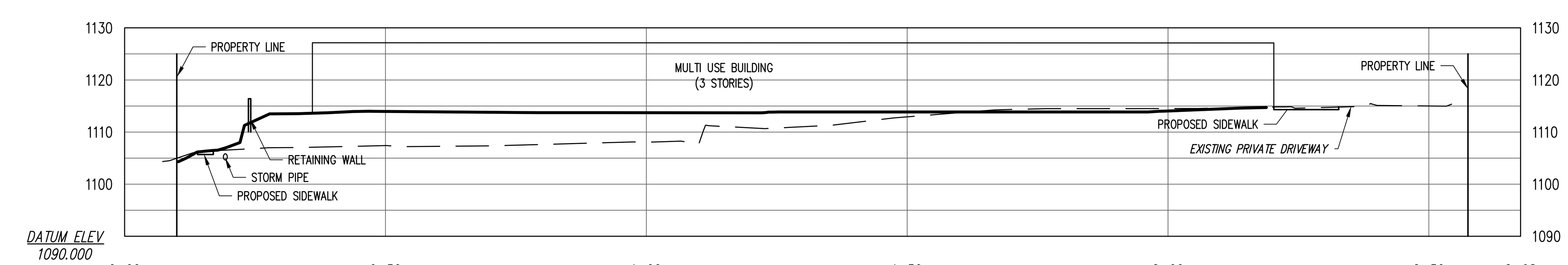

SITE CROSS SECTION A-A (WEST SIDE YARD TO EAST SIDE YARD)
SCALE:
VERTICAL: 1" = 5'
HORIZONTAL: 1" = 20'

PennTerra
ENGINEERING INC.
CENTRAL PENNSYLVANIA REGION OFFICE:
3075 ENTERPRISE DRIVE
SUITE 100
STATE COLLEGE, PA 16801
PH: 814-231-8285
Fax: 814-237-2308
LANCASTER REGION OFFICE:
3904 B ABEL DRIVE
COLUMBIA, PA 17512
PH: 717-522-5031
Fax: 717-522-5046
WWW.PENNTERRA.COM

COPYRIGHT 2019 BY THE ENGINEER
THE INFORMATION CONTAINED HEREON MAY NOT BE USED OR COPIED IN ANY MANNER WITHOUT THE WRITTEN PERMISSION OF THE ENGINEER EXCEPT AS OTHERWISE PROVIDED BY APPROPRIATE LAWS OR STATUTES.
© PENNTERRA ENGINEERING 2019 ALL RIGHTS RESERVED

COMMONWEALTH OF PENNSYLVANIA
REGISTERED PROFESSIONAL
JOHN C. SEPP
ENGINEER
040003-E
Seal

Seal

Designer RRK
Draftsman JDB
Proj.Manager JCS
Surveyor ----
Perimeter Ck.
Book ---- Pg ----
Drive Layout 16094-12-X SEC. & SIGN DETAILS
Acad X-SECS AND SIGN DETAILS-24'X36'

Date	Description
12-3-19 MLH	REVISED PER TWP COMMENTS
11-1-19 MLH	REVISED PER TWP COMMENTS

REVISIONS

WEST CHERRY LANE MULTI USE BUILDING
FERGUSON TOWNSHIP
CENTRE COUNTY
PENNSYLVANIA

PRELIMINARY/FINAL LAND DEVELOPMENT PLAN

SITE CROSS SECTIONS & SIGN DETAILS

PROJECT NO. 16094.01
DATE SEPTEMBER 12, 2019
SCALE N.T.S.
SHEET NO. 12

P:\ddtproj\2016\16094\dwg\plot files\final plans\FINAL PLANS - REVISED\16094-12-X SEC. & SIGN DETAILS.dwg, 12/4/2019 11:51:01 AM, 1:1

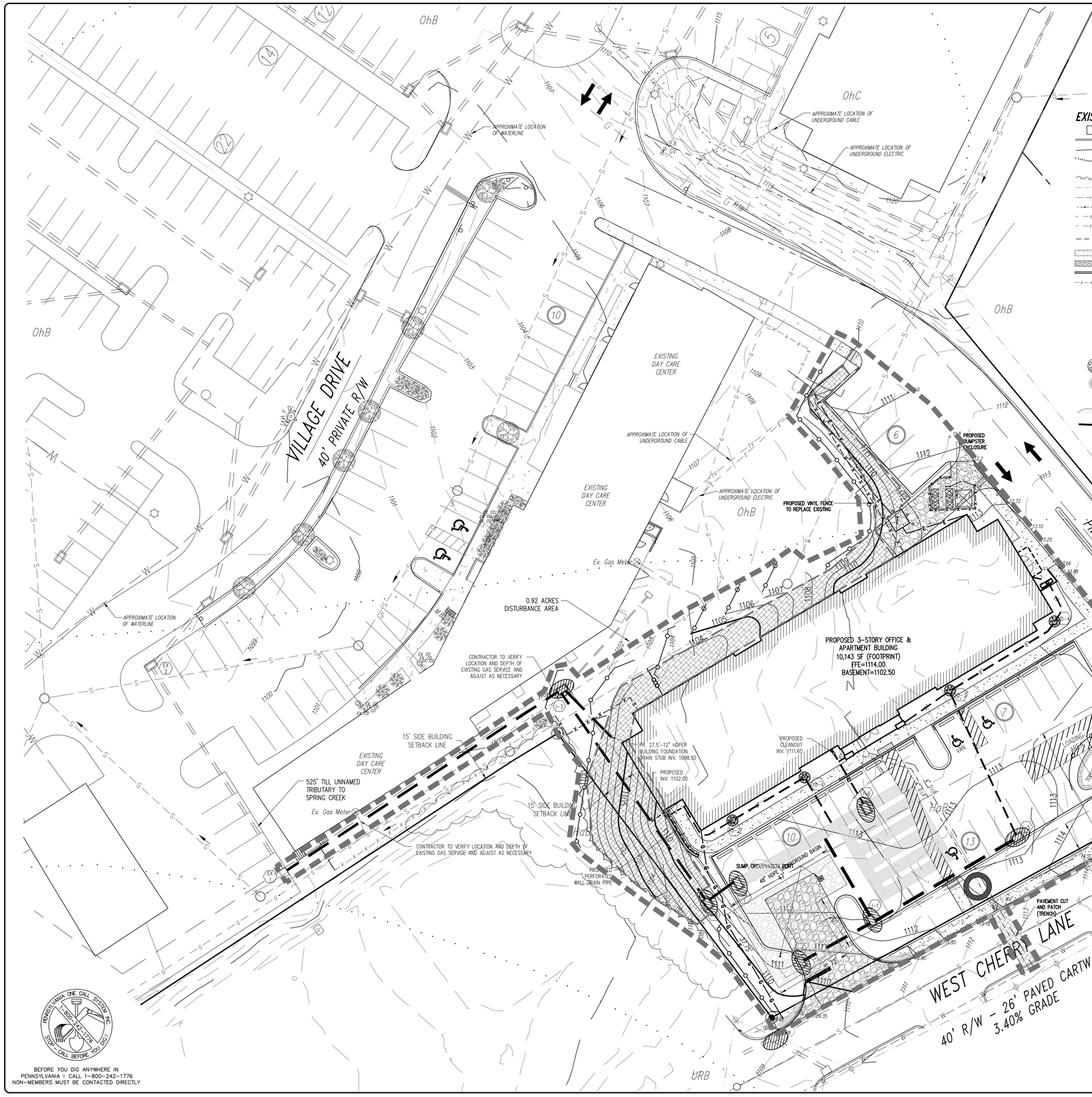

SOILS LEGEND

Soil cover on the site consists of:

- HaB – Hagerstown Silt Loam, 3%-8% Slopes
- No – Nolin Silt Loam, Local Alluvium, 0%-5% Slopes
- OhB – Opequon-Hagerstown Complex, 3%-8% Slopes
- OhC – Opequon-Hagerstown Complex, 8%-15% Slopes
- OuD – Opequon-Rock Outcrop Complex, 8%-25% Slopes
- URB – Urban Land-Hagerstown Complex, Gently Sloping

EXISTING FEATURES LEGEND

- Existing Building
- Existing Curbing
- Existing Contours (10's)
- Existing Soil Limit Line / Boundary
- HaB Existing Soil Type
- Existing Tree Line
- Existing Overhead Utility Line w/ Pole
- Existing 6" & 8" PVC Sanitary Sewer w/ Manhole
- Existing 4", 6" & 8" D.I.P. Water Line w/ Valve
- Existing 2" & 4" Plastic & D.I.P. Gas Line
- Existing Underground Electric
- Existing 6" PVC & 12" PVC, 12", 15", 18" CMP Storm Sewer w/ Inlet
- Existing Concrete Areas
- Existing Gravel Areas
- Existing Retaining Wall
- Existing Vinyl/Wooden Fence
- Existing Fire Hydrant
- Existing Manhole
- Existing Utility Pole
- Existing Light Pole/Standard
- Existing Light Pole (Single Fixture)
- Existing Sign
- M.B. Existing Mail Box
- Existing Deciduous Tree
- Existing Evergreen Tree
- Existing Shrub
- 25% Slopes Or Greater
- Flood Plain

SURVEY FEATURES LEGEND

- Property Line, Lot Line or Right of Way Line
- Adjoining Property Line
- Building Setback Line
- Easement Line
- Roadway Center Line
- I.P. Found

PROPOSED FEATURES LEGEND

- PROPOSED BUILDING — PROPOSED BUILDING
- PROPOSED CURBING
- PROPOSED CURB TRANSITIONS
- 1200 — PROPOSED MAJOR CONTOURS W/ ELEVATION
- 1199 — PROPOSED MINOR CONTOURS W/ ELEVATION
- PROPOSED TREE LINE
- PROPOSED 8" SANITARY SEWER W/ MANHOLE & FLOW ARROWS
- CO — PROPOSED 6" PVC SANITARY SEWER LATERAL W/ CLEAN OUT
- WV — PROPOSED 4" DUCTILE IRON FIRE LINE W/ VALVE
- WV — PROPOSED 3" DUCTILE IRON WATER SERVICE LATERAL W/ VALVE
- RD — PROPOSED ROOF DRAIN LINE
- PROPOSED UNDERGROUND ELECTRIC
- PROPOSED UNDERGROUND TELEPHONE
- PROPOSED CONCRETE SIDEWALK
- PROPOSED CONCRETE AREAS
- PROPOSED PAVED AREAS (EXCEPT WALK/BIKE PATH)
- PROPOSED VINYL FENCE
- PROPOSED WOODEN FENCE
- PROPOSED RETAINING WALL
- PROPOSED MANHOLE
- PROPOSED STORM SEWER INLET – TYPE M
- PROPOSED STORM SEWER INLET – TYPE C
- GV — PROPOSED GAS VALVE
- CO — PROPOSED CLEAN-OUT W/ CONC. PAD
- PROPOSED LIGHT POLE/STANDARD
- PROPOSED LIGHT (WALL MOUNT)
- S2 — PROPOSED SIGN
- PROPOSED PARKING STALL COUNT
- PROPOSED TRAFFIC FLOW ARROWS
- PROPOSED PAINTED HANDICAPPED PARKING SYMBOL
- VAN — PROPOSED PAINTED HANDICAPPED PARKING SYMBOL (VAN)
- DC — PROPOSED DEPRESSED CURB AREA
- PROPOSED PAINTED SITE CROSSWALK (ACCESSIBLE ROUTE)
- PROPOSED HANDICAPPED RAMP

EROSION & SEDIMENTATION CONTROL LEGEND

- LIMIT OF DISTURBANCE (0.94 ACRES)
- 18" SILT SOCK
- CONSTRUCTION ENTRANCE
- INLET PROTECTION
- YARD DRAIN PROTECTION
- EROSION CONTROL LINING (CURLEX I OR APPROVED EQUAL)
- TOPSOIL STOCKPILE — TOPSOIL STOCKPILE
- CONCRETE WASHOUT AREA

GRAPHIC SCALE

20 0 10 20 40 80

(IN FEET)
1 inch = 20 ft.

BEFORE YOU DIG ANYWHERE IN PENNSYLVANIA | CALL 1-800-242-1776
NON-MEMBERS MUST BE CONTACTED DIRECTLY

PennTerra ENGINEERING INC.

CENTRAL PENNSYLVANIA REGION OFFICE:
3075 ENTERPRISE DRIVE
SUITE 100
STATE COLLEGE, PA 16801
PH: 814-231-8285
Fax: 814-237-2308

LANCASTER REGION OFFICE:
3904 B ABEL DRIVE
COLUMBIA, PA 17512
PH: 717-522-5031
Fax: 717-522-5046

WWW.PENNTERRA.COM

COPYRIGHT 2019 BY THE ENGINEER
THE INFORMATION CONTAINED HEREON MAY NOT BE USED OR COPIED IN ANY MANNER WITHOUT THE WRITTEN PERMISSION OF THE ENGINEER EXCEPT AS OTHERWISE PROVIDED BY APPROPRIATE LAWS OR STATUTES.
© PENNTERRA ENGINEERING 2019 ALL RIGHTS RESERVED

COMMONWEALTH OF PENNSYLVANIA
REGISTERED PROFESSIONAL
JOHN C. SEPP
ENGINEER
040003-E
Seal

Designer	RRK
Draftsman	JDB
Proj.Manager	JCS
Surveyor	----
Perimeter Ck.	
Book ----	Pg ----
Drive	Layout 16094-ES1
Acad	ES1-24'X36'

Date	Description
12-3-19 MLH	REVISED PER TWP COMMENTS
11-1-19 MLH	REVISED PER TWP COMMENTS

REVISIONS

WEST CHERRY LANE MULTI USE BUILDING

FERGUSON TOWNSHIP
CENTRE COUNTY
PENNSYLVANIA

PRELIMINARY/FINAL LAND DEVELOPMENT PLAN

EROSION AND SEDIMENTATION CONTROL PLAN

PROJECT NO. 16094.01

DATE SEPTEMBER 12, 2019

SCALE 1"= 20'

SHEET NO. ES1

P:\ldproj\2016\16094\dwg\plot files\final plans\FINAL PLANS - REVISED\16094-ES1.dwg, 12/4/2019 11:51:15 AM, 1:1

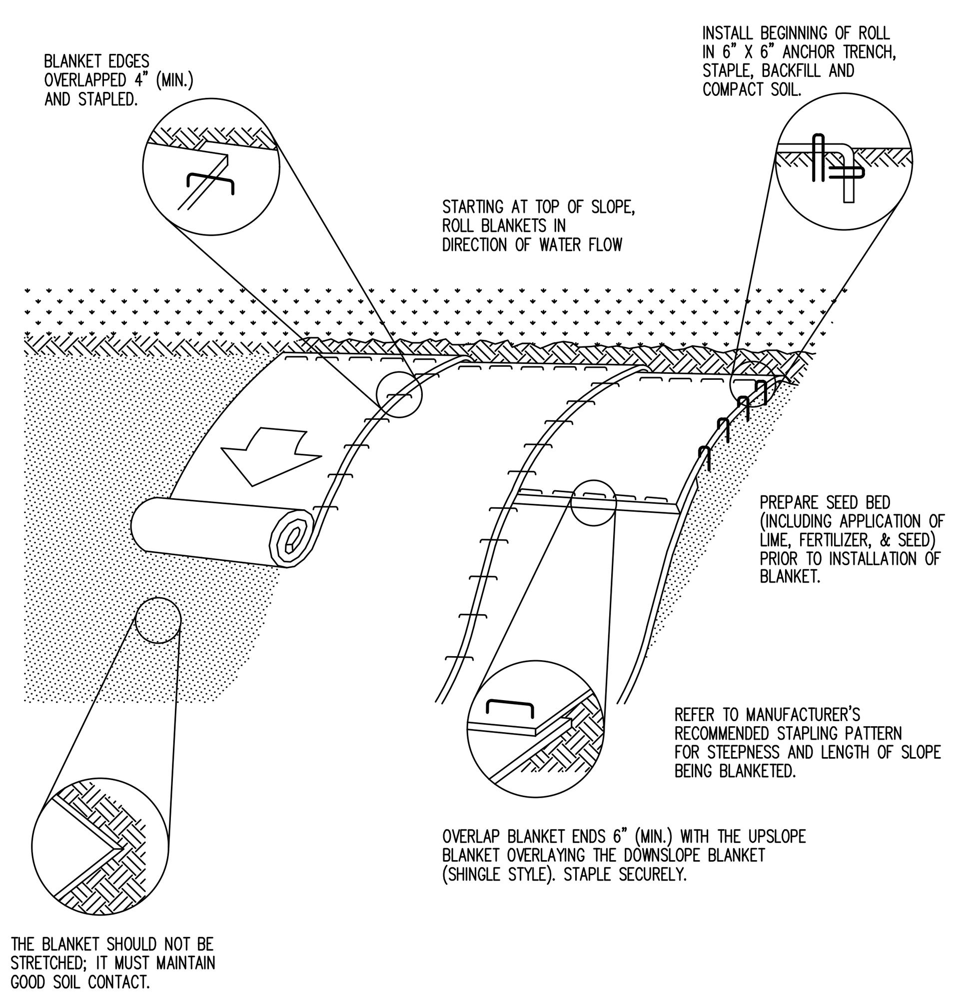

NOTES:
1. SEED AND SOIL AMENDMENTS SHALL BE APPLIED ACCORDING TO THE RATES IN THE PLAN DRAWINGS PRIOR TO INSTALLING THE BLANKET.
2. PROVIDE ANCHOR TRENCH AT TOE OF SLOPE IN SIMILAR FASHION AS AT TOP OF SLOPE.
3. SLOPE SURFACE SHALL BE FREE OF ROCKS, CLODS, STICKS, AND GRASS.
4. BLANKET SHALL HAVE GOOD CONTINUOUS CONTACT WITH UNDERLYING SOIL THROUGHOUT ENTIRE LENGTH. LAY BLANKET LOOSELY AND STAKE OR STAPLE TO MAINTAIN DIRECT CONTACT WITH SOIL. DO NOT STRETCH BLANKET.
5. THE BLANKET SHALL BE STAPLED IN ACCORDANCE WITH THE MANUFACTURER'S RECOMMENDATIONS.
6. BLANKETED AREAS SHALL BE INSPECTED WEEKLY AND AFTER EACH RUNOFF EVENT UNTIL PERENNIAL VEGETATION IS ESTABLISHED TO A MINIMUM UNIFORM 70% COVERAGE THROUGHOUT THE BLANKETED AREA. DAMAGED OR DISPLACED BLANKETS SHALL BE RESTORED OR REPLACED WITHIN 4 CALENDAR DAYS.

EROSION CONTROL BLANKET INSTALLATION

NOT TO SCALE

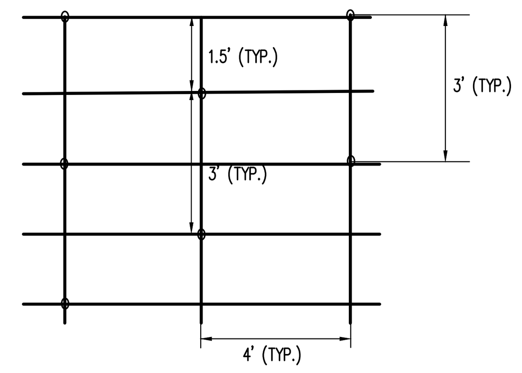

NOTE: THE FOLLOWING STAPLE PATTERN SHALL BE USED FOR ALL EROSION CONTROL LINING INSTALLATION.

TYPICAL ANCHORING PATTERN (1.1 STAPLES/YD^2)

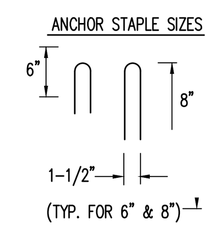

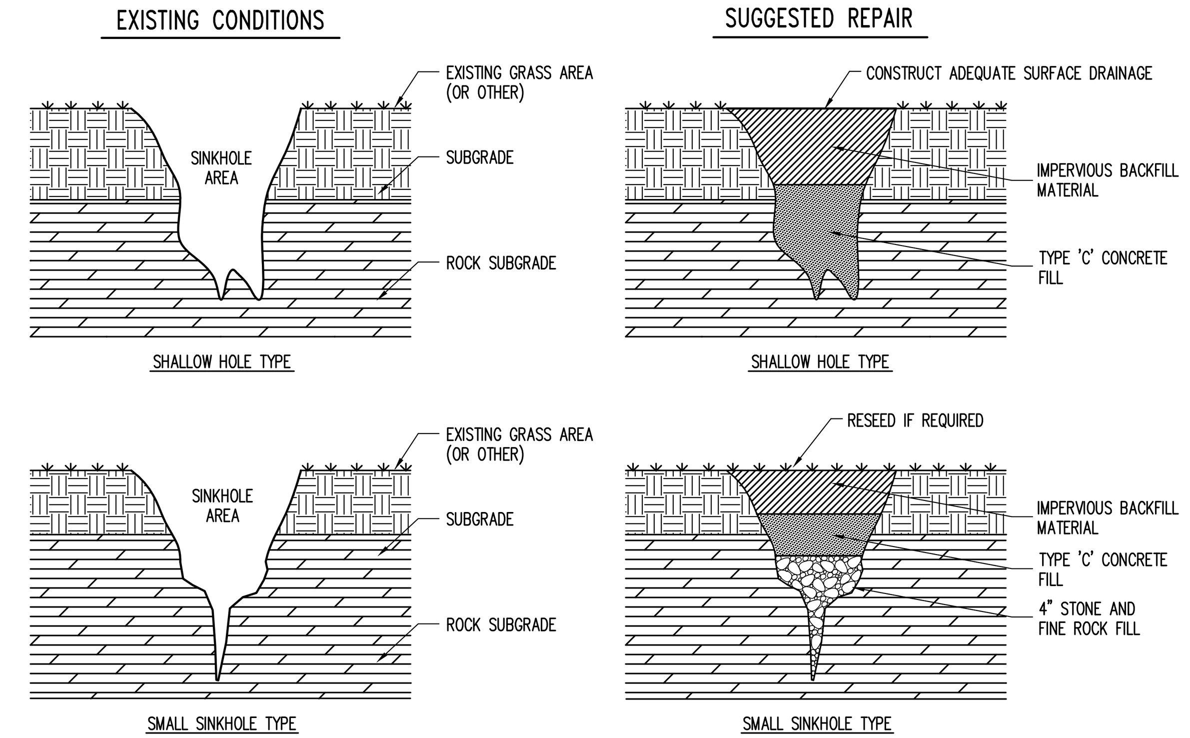

NOTE:
THESE DETAILS REPRESENT TYPICAL SINKHOLE SHAPES AND REPAIR TECHNIQUES. SINKHOLES VARY IN SIZE AND TYPE. THEREFORE, THE OWNER'S GEOTECHNICAL ENGINEER SHALL BE CONTACTED PRIOR TO FIELD REPAIR OF ANY SINKHOLE. (NOT INCLUDED IN UTILITY/EARTHWORK BASE BID)

SINKHOLE REPAIR

NOT TO SCALE

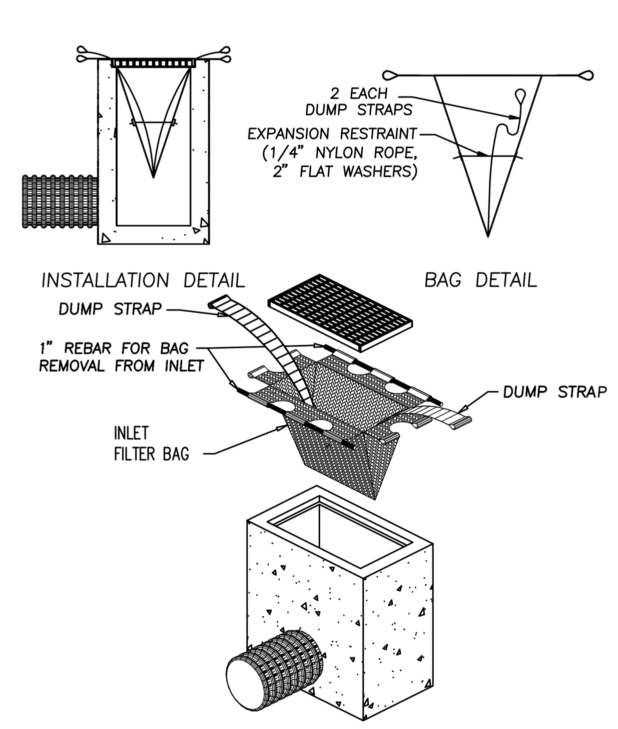

INLET FILTER BAG (TYPE M)

NOT TO SCALE

INLET FILTER BAG NOTES:

FILTER BAG SHOULD TRAP PARTICLES LARGER THAN 150 MICRONS.

WHEREVER FILTER BAGS ARE USED THEY SHOULD BE INSTALLED ACCORDING TO MANUFACTURERS SPECIFICATIONS.

INLET FILTER BAGS SHOULD BE INSPECTED ON A WEEKLY BASIS AND AFTER EACH RUNOFF EVENT.

FILTER BAGS SHOULD BE CLEANED AND/OR REPLACED WHEN BAG IS 1/2 FULL

DAMAGED FILTER BAGS SHOULD BE REPLACED.

NEEDED REPAIRS SHOULD BE INITIATED IMMEDIATELY AFTER THE INSPECTION.

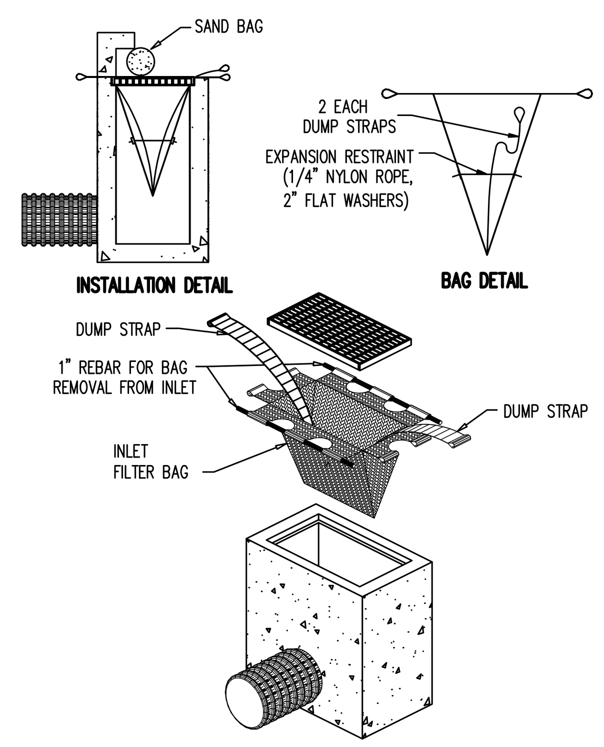

INLET FILTER BAG (TYPE C)

NOT TO SCALE

INLET FILTER BAG NOTES:

FILTER BAG SHOULD TRAP PARTICLES LARGER THAN 150 MICRONS.

WHEREVER FILTER BAGS ARE USED THEY SHOULD BE INSTALLED ACCORDING TO MANUFACTURERS SPECIFICATIONS.

INLET FILTER BAGS SHOULD BE INSPECTED ON A WEEKLY BASIS AND AFTER EACH RUNOFF EVENT.

FILTER BAGS SHOULD BE CLEANED AND/OR REPLACED WHEN BAG IS 1/2 FULL

DAMAGED FILTER BAGS SHOULD BE REPLACED.

NEEDED REPAIRS SHOULD BE INITIATED IMMEDIATELY AFTER THE INSPECTION.

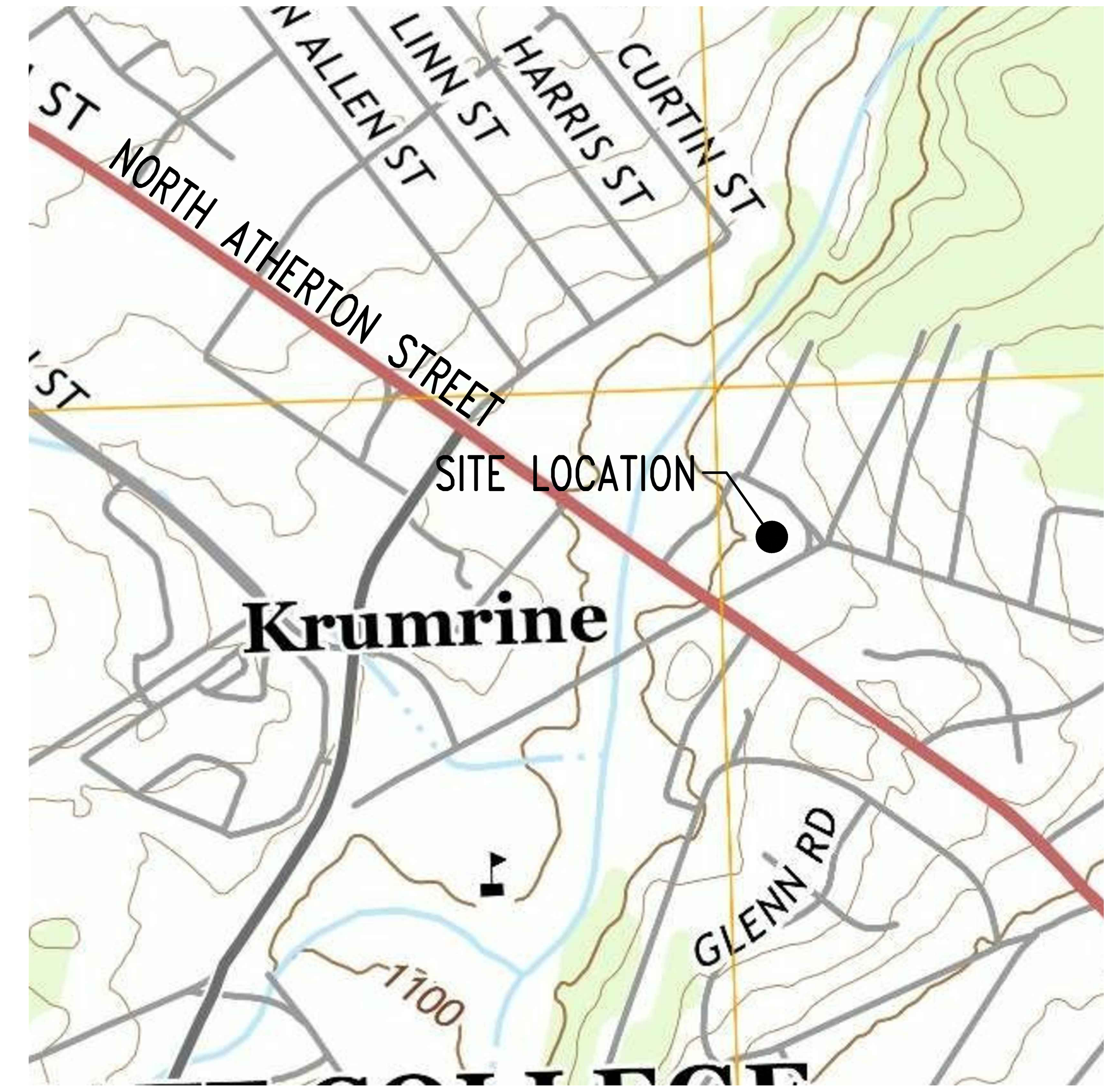

LOCATION MAP (SCALE 1" = 500')

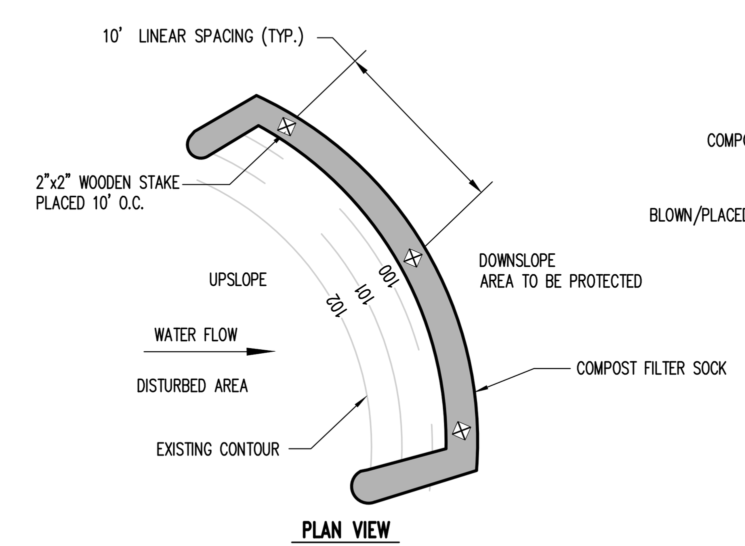

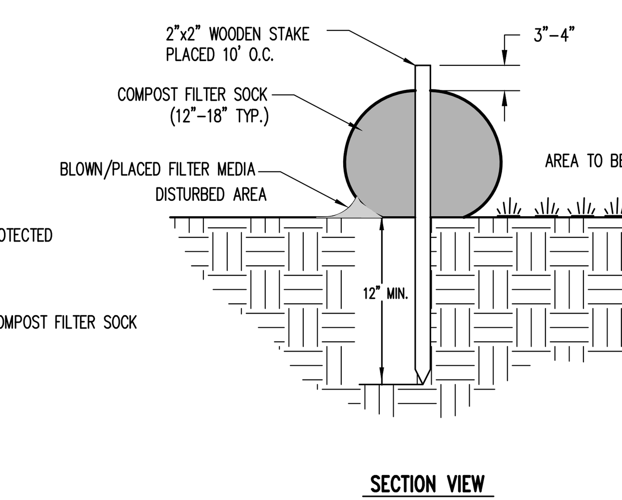

NOTES:
1. All material to meet EPA compost filter sock specifications.
2. Silt sock compost/soil/rock/seed fill to meet application requirements.
3. Silt socks depicted are for use on minimal slopes. Greater slopes may require larger silt socks per the Engineer.
4. Compost material to be dispersed on site, as determined by Engineer.

TABLE 4.1
Compost Sock Fabric Minimum Specifications

Material Type	3 mil HDPE	5 mil HDPE	5 mil HDPE	Multi-Filament Polypropylene (MFPP)	Heavy Duty Multi-Filament Polypropelene (HDMFPP)
Material Characteristics	Photo-degradable	Photo-degradable	Bio-degradable	Photo-degradable	Photo-degradable
Sock Diameters	12" 18"	12" 18" 24" 32"	12" 18" 24" 32"	12" 18" 24" 32"	12" 18" 24" 32"
Mesh Opening	3/8"	3/8"	3/8"	3/8"	1/8"
Tensile Strength		26 psi	26 psi	44 psi	202 psi
Ultraviolet Stability % Original Strength (ASTM G-155)	23% at 1000 hr.	23% at 1000 hr.		100% at 1000 hr.	100% at 1000 hr.
Minimum Functional Longevity	6 months	9 months	6 months	1 year	2 years
Two-Ply Systems					
Inner Containment Netting			HDPE biaxial net Continuously wound Fusion-welded junctures 3/4"x3/4" Max. aperture size		
Outer Filtration Mesh			Composite Polypropylene Fabric (Woven layer and non-woven fleece mechanically fused via needle punch) 3/16" Max. aperture size		
Sock fabrics composed of burlap may be used on projects lasting 6 months or less.					

TABLE 4.2
Compost Standards

Organic Matter Content	25%-100% (dry weight basis)
Organic Portion	Fibrous and elongated
pH	5.5-8.5
Moisture Content	30%-60%
Particle Size	30% - 50% pass through 3/8" sieve
Soluble Salt Concentration	5.0 dS/m (mmhos/cm) Maximum

COMPOST FILTER SOCK DETAIL

NOT TO SCALE

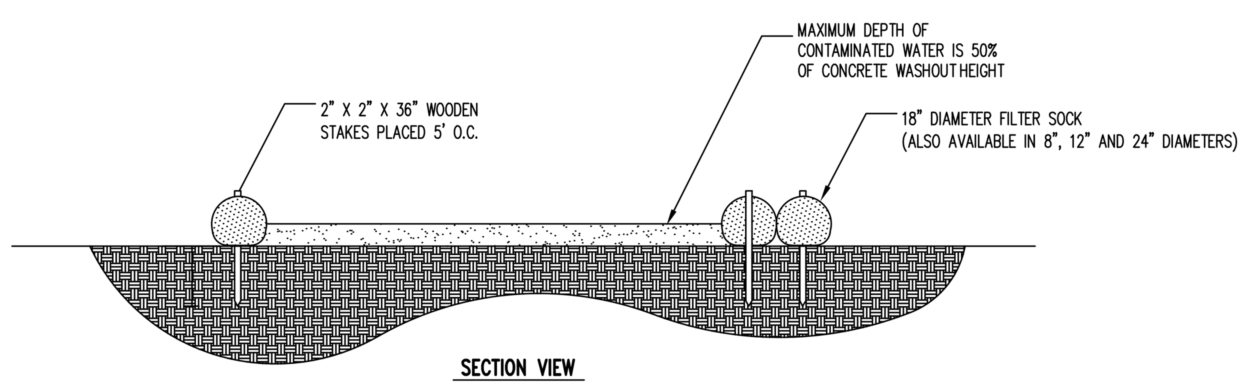

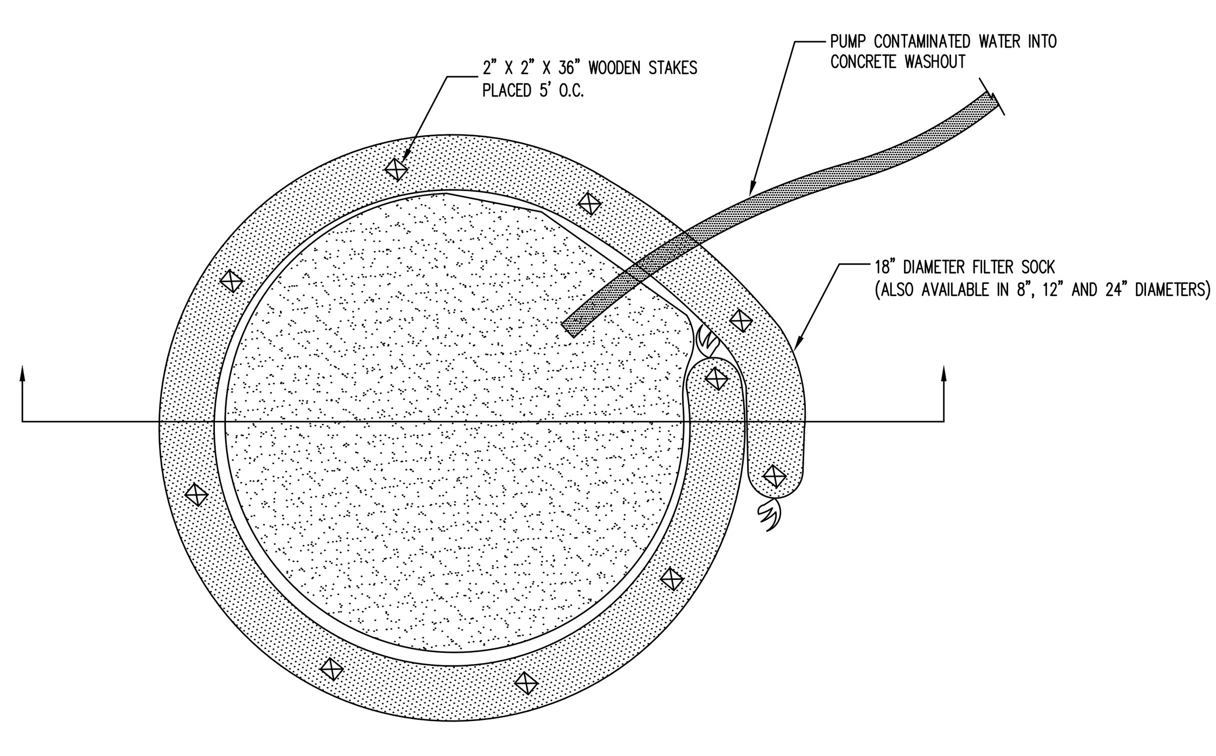

NOTES:
1. INSTALL ON FLAT GRADE FOR OPTIMUM PERFORMANCE.
2. CONCRETE WASHOUT MAY BE STACKED IN A PYRAMIDAL CONFIGURATION FOR ADDED HEIGHT AND STABILITY.
3. CONCRETE WASHOUT MAY BE DIRECT SEEDED AT THE TIME OF INSTALLATION.
4. A SUITABLE IMPERVIOUS GEOMEMBRANE SHALL BE PLACED AT THE LOCATION OF THE WASHOUT PRIOR TO INSTALLING THE FILTER SOCKS.

CONCRETE WASHOUT AREA

NOT TO SCALE

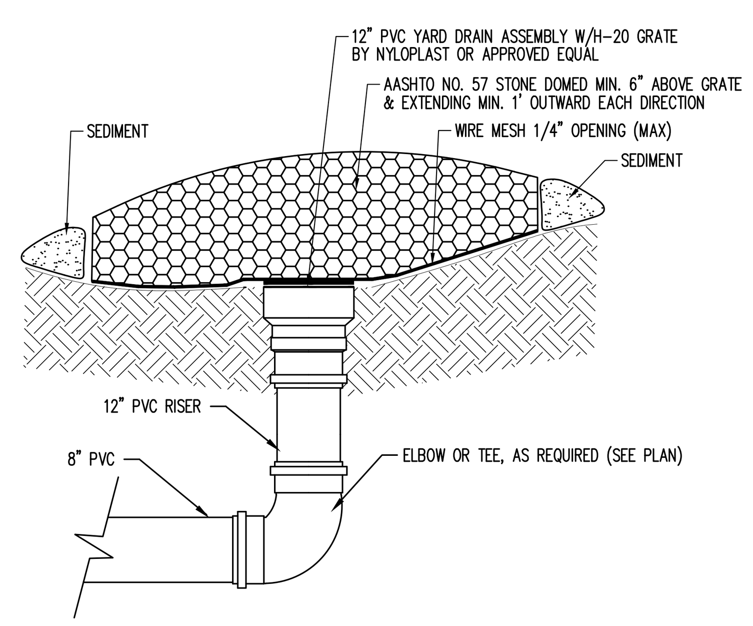

YARD DRAIN INLET PROTECTION

NOT TO SCALE

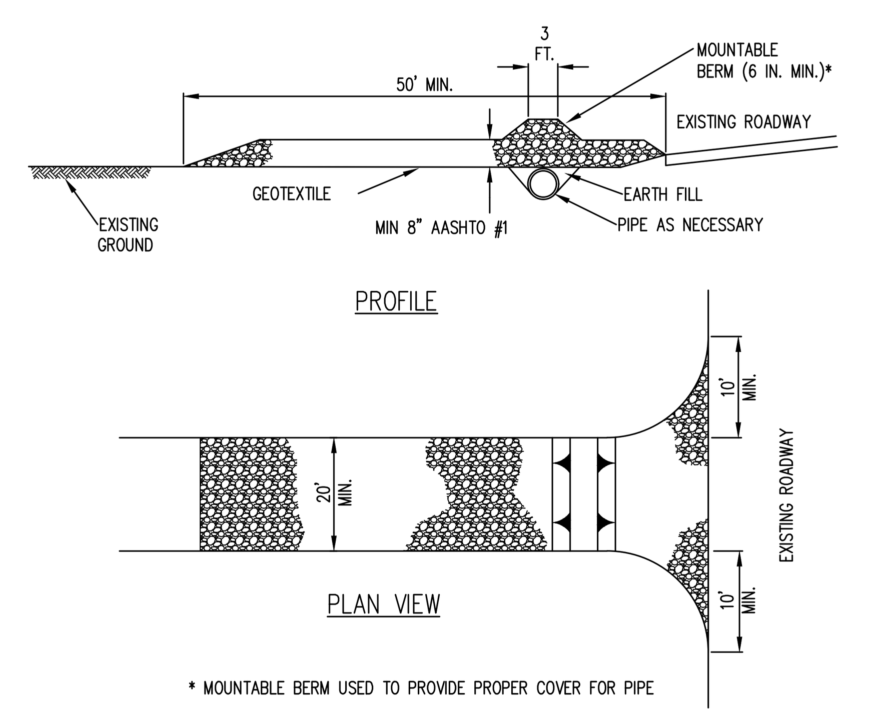

* MOUNTABLE BERM USED TO PROVIDE PROPER COVER FOR PIPE

NOTES:

REMOVE TOPSOIL PRIOR TO INSTALLATION OF ROCK CONSTRUCTION ENTRANCE. EXTEND ROCK OVER FULL WIDTH OF ENTRANCE.

RUNOFF SHALL BE DIVERTED FROM ROADWAY TO A SUITABLE SEDIMENT REMOVAL BMP PRIOR TO ENTERING ROCK CONSTRUCTION ENTRANCE.

MOUNTABLE BERM SHALL BE INSTALLED WHEREVER OPTIONAL CULVERT PIPE IS USED AND PROPER PIPE COVER AS SPECIFIED BY MANUFACTURER IS NOT OTHERWISE PROVIDED. PIPE SHALL BE SIZED APPROPRIATELY FOR SIZE OF DITCH BEING CROSSED.

MAINTENANCE: ROCK CONSTRUCTION ENTRANCE THICKNESS SHALL BE CONSTANTLY MAINTAINED TO THE SPECIFIED DIMENSIONS BY ADDING ROCK. A STOCKPILE SHALL BE MAINTAINED ON SITE FOR THIS PURPOSE. ALL SEDIMENT DEPOSITED ON PAVED ROADWAYS SHALL BE REMOVED AND RETURNED TO THE CONSTRUCTION SITE IMMEDIATELY. IF EXCESSIVE AMOUNTS OF SEDIMENT ARE BEING DEPOSITED ON ROADWAY, EXTEND LENGTH OF ROCK CONSTRUCTION ENTRANCE BY 50 FOOT INCREMENTS UNTIL CONDITION IS ALLEVIATED OR INSTALL WASH RACK. WASHING THE ROADWAY OR SWEEPING THE DEPOSITS INTO ROADWAY DITCHES, SEWERS, CULVERTS, OR OTHER DRAINAGE COURSES IS NOT ACCEPTABLE.

CONSTRUCTION ENTRANCE

NOT TO SCALE

PennTerra
ENGINEERING INC.

CENTRAL PENNSYLVANIA REGION OFFICE:
3075 ENTERPRISE DRIVE
SUITE 100
STATE COLLEGE, PA 16801
PH: 814-231-8285
Fax: 814-237-2308

LANCASTER REGION OFFICE:
3904 B ABEL DRIVE
COLUMBIA, PA 17512
PH: 717-522-5031
Fax: 717-522-5046

WWW.PENNTERRA.COM

COPYRIGHT 2019 BY THE ENGINEER
THE INFORMATION CONTAINED HEREON MAY NOT BE USED OR COPIED IN ANY MANNER WITHOUT THE WRITTEN PERMISSION OF THE ENGINEER EXCEPT AS OTHERWISE PROVIDED BY APPROPRIATE LAWS OR STATUTES.
© PENNTERRA ENGINEERING 2019
ALL RIGHTS RESERVED

COMMONWEALTH OF PENNSYLVANIA
REGISTERED PROFESSIONAL
JOHN C. SEPP
ENGINEER
040003-E
Seal

Seal

Designer RRK
Draftsman JDB
Proj.Manager JCS
Surveyor ----
Perimeter Ck.
Book ---- Pg ----
Drive Layout 16094-ES2
Acad ES2-24'X36'

Date	Description
12-3-19 MLH	REVISED PER TWP COMMENTS
11-1-19 MLH	REVISED PER TWP COMMENTS

REVISIONS

WEST CHERRY LANE MULTI USE BUILDING

FERGUSON TOWNSHIP
CENTRE COUNTY
PENNSYLVANIA

PRELIMINARY/FINAL LAND DEVELOPMENT PLAN

EROSION AND SEDIMENTATION CONTROL DETAILS

PROJECT NO. 16094.01

DATE SEPTEMBER 12, 2019

SCALE N.T.S.

SHEET NO. ES2

P:\ddtproj\2016\16094\dwg\plot files\final plans\FINAL PLANS - REVISED\16094-ES2.dwg, 12/4/2019 11:51:47 AM, 1:1

Standard Erosion and Sedimentation Control Plan Notes

1. All earth disturbances, including clearing and grubbing as well as cuts and fills shall be done in accordance with the approved E&S plan. A copy of the approved drawings (stamped, signed and dated by the Centre County Conservation District) must be available at the project site at all times. The Centre County Conservation District shall be notified of any changes to the approved plan prior to implementation of those changes. The Centre County Conservation District may require a written submittal of those changes for review and approval at its discretion.
2. At least 7 days prior to starting any earth disturbance activities, including clearing and grubbing, the owner and/or operator shall invite all contractors, the landowner, appropriate municipal officials, the E&S plan preparer, the PCSM plan preparer, the licensed professional responsible for oversight of critical stages of implementation of the PCSM plan , and a representative from the Centre County Conservation District to an on–site preconstruction meeting.
3. At least 3 days prior to starting any earth disturbance activities, or expanding into an area previously unmarked, the Pennsylvania One Call System Inc. shall be notified at 1–800–242–1776 for the location of existing underground utilities.
4. All earth disturbance activities shall proceed in accordance with the sequence provided on the plan drawings. Deviation from that sequence must be approved in writing from the Centre County Conservation District or by the Department prior to implementation
5. Areas to be filled are to be cleared, grubbed, and stripped of topsoil to remove trees, vegetation, roots and other objectionable material.
6. Clearing, grubbing, and topsoil stripping shall be limited to those areas described in each stage of the construction sequence. General site clearing, grubbing and topsoil stripping may not commence in any stage or phase of the project until the E&S BMPs specified by the BMP sequence for that stage or phase have been installed and are functioning as described in this E&S plan.
7. At no time shall construction vehicles be allowed to enter areas outside the limit of disturbance boundaries shown on the plan maps. These areas must be clearly marked and fenced off before clearing and grubbing operations begin.
8. Topsoil required for the establishment of vegetation shall be stockpiled at the location(s) shown on the plan maps(s) in the amount necessary to complete the finish grading of all exposed areas that are to be stabilized by vegetation. Each stockpile shall be protected in the manner shown on the plan drawings. Stockpile heights shall not exceed 35 feet. Stockpile slopes shall be 2H:1V or flatter.
9. Immediately upon discovering unforeseen circumstances posing the potential for accelerated erosion and/or sediment pollution, the operator shall implement appropriate best management practices to minimize the potential for erosion and sediment pollution and notify the Centre County Conservation District and/or the regional office of the Department.
10. All building materials and wastes shall be removed from the site and recycled or disposed of in accordance with the Department's Solid Waste Management Regulations at 25 Pa. Code 260.1 et seq., 271.1, and 287.1 et. seq. No building materials or wastes or unused building materials shall be burned, buried, dumped, or discharge at the site.
11. All off–site waste and borrow areas must have an E&S plan approved by the Centre County Conservation District or the Department fully implemented prior to being activated.
12. The contractor is responsible for ensuring that any material brought on site is clean fill. Form FP–001 must be retained by the property owner for any fill material affected by a spill or release of a regulated substance by qualifying as clean fill due to analytical testing.
13. All pumping of water from any work area shall be done according to the procedure described in this plan, over undisturbed vegetated areas.
14. Until the site is stabilized, all erosion and sediment BMPs shall be maintained properly. Maintenance shall include inspections of all erosion and sediment BMPs after each runoff event and on a weekly basis. All preventative and remedial maintenance work, including clean out, repair, replacement, regrading, reseeding, remulching and renetting must be performed immediately. If the E&S BMPs fail to perform as expected, replacement BMPs, or modifications of those installed will be required.
15. A log showing dates that E&S BMPs were inspected as well as any deficiencies found and the date they were corrected shall be maintained on the site and be made available to regulatory agency officials at the time of inspection.
16. Sediment tracked onto any public roadway or sidewalk shall be returned to the construction site by the end of each work day and disposed in the manner described in this plan. In no case shall the sediment be washed, shoveled, or swept into any roadside ditch, storm sewer, or surface water.
17. All sediment removed from BMPs shall be disposed of in the manner described on the plan drawings.
18. Areas which are to be topsoiled shall be scarified to a minimum depth of 3 to 5 inches – 6 to 12 inches on compacted soils – prior to placement of topsoil. Areas to be vegetated shall have a minimum 4 inches of topsoil in place prior to seeding and mulching. Fill outslopes shall have a minimum of 2 inches of topsoil.
19. All fills shall be compacted as required to reduce erosion, slippage, settlement, subsidence or other related problems. Fill intended to support buildings, structures and conduits, etc. shall be compacted in accordance with local requirements or codes.
20. All earthen fills shall be placed in compacted layers not to exceed 9 inches in thickness.
21. Fill materials shall be free of frozen particles, brush, roots, sod, or other foreign or objectionable materials that would interfere with or prevent construction of satisfactory fills.
22. Frozen materials or soft, mucky, or highly compressible materials shall not be incorporated into fills.
23. Fill shall not be placed on saturated or frozen surfaces.
24. Seeps or springs encountered during construction shall be handled in accordance with the standard and specification for subsurface drain or other approved method.
25. All graded areas shall be permanently stabilized immediately upon reaching finished grade. Cut slopes in competent bedrock and rock fills need not be vegetated. Seeded areas within 50 feet of a surface water, or as otherwise shown on the plan drawings, shall be blanketed according to the standards of this plan.
26. Immediately after earth disturbance activities cease in any area or subarea of the project, the operator shall stabilize all disturbed areas. During non–germinating months, mulch or protective blanketing shall be applied as described in the plan. Areas not at finished grade, which will be reactivated within 1 year, may be stabilized in accordance with the temporary stabilization specifications. Those areas which will not be reactivated within 1 year shall be stabilized in accordance with the permanent stabilization specifications.
27. Permanent stabilization is defined as a minimum uniform, perennial 70% vegetative cover or other permanent non–vegetative cover with a density sufficient to resist accelerated erosion. Cut and fill slopes shall be capable of resisting failure due to slumping, sliding, or other movements.
28. E&S BMPs shall remain functional as such until all areas tributary to them are permanently stabilized or until they are replaced by another BMP approved by the Centre County Conservation District or the Department.
29. Upon completion of all earth disturbance activities and permanent stabilization of all disturbed areas, the owner and/or operator shall contact the Centre County Conservation District for an inspection prior to removal of the E&S BMPs.
30. After final site stabilization has been achieved, temporary erosion and sediment BMPs must be removed. Areas disturbed during removal of the BMPs shall be stabilized immediately. In order to ensure rapid revegetation of disturbed areas, such removal are to be done only during the germinating season.
31. Upon completion of all earth disturbance activities and permanent stabilization of all disturbed areas, the owner and/or operator shall contact the Centre County Conservation District to schedule a final inspection.
32. Failure to correctly install E&S BMPs, failure to prevent sediment–laden runoff from leaving the construction site, or failure to take immediate corrective action to resolve failure of E&S BMPs may result in administrative, civil, and/or criminal penalties being instituted by the Department as defined in Section 602 of the Pennsylvania Clean Streams Law. The Clean Streams Law provides for up to $10,000 per day in civil penalties, up to $10,000 in summary criminal penalties, and up to $25,000 in misdemeanor criminal penalties for each violation.
33. Concrete wash water shall be handled in the manner described on the plan drawings. In no case shall it be allowed to enter any surface waters or groundwater systems.
34. All channels shall be kept free of obstructions including but not limited to fill, rocks, leaves, woody debris, accumulated sediment, excess vegetation, and construction material/wastes.
35. Underground utilities cutting through any active channel shall be immediately backfilled and the channel restored to its original cross–section and protective lining. Any base flow within the channel shall be conveyed past the work area in the manner described in this plan until such restoration is complete.

Responsibilities for Fill Materials

The contractor is responsible to use environmental due diligence to ensure any fill material required to be imported to or exported from the site qualifies as Clean Fill.

Clean Fill is defined as: Uncontaminated, non–water soluble, non–decomposable, inert, solid material. The term includes soil, rock, stone, dredged material, used asphalt, and brick, block or concrete from construction and demolition activities that is separate from other waste and is recognizable as such. The term does not include materials placed in or on the waters of the commonwealth unless otherwise authorized. (The term "used asphalt" does not include milled asphalt or asphalt that has been processed for re–use.)

Environmental due diligence: Investigative techniques, including, but not limited to, visual property inspections, electronic data base searches, review of property ownership, review of property use history, Sanborn maps, environmental questionnaires, transaction screens, analytical testing, environmental assessments or audits. Analytical testing is not a required part of due diligence unless visual inspection and/or review of the past land use of the property indicates that the fill may have been subjected to a spill or release of regulated substance. If the fill may have been affected by a spill or release of a regulated substance, it must be tested to determine if it qualifies as clean fill. Testing should be performed in accordance with Appendix A of the Department's policy "Management of Fill".

Fill material that does not qualify as clean fill is regulated fill. Regulated fill is waste and must be managed in accordance with the Department's municipal or residual waste regulations based on 25 Pa. Code Chapters 287 Residual Waste management or 271 Municipal Waste Management, whichever is applicable.

Recycling and Disposal of Materials

The operator shall remove from the site, recycle, or dispose of all building materials and wastes in accordance with the Department's Solid Waste Management Regulations at 25 PA. Code 260.1et seq., 271.1 et seq., and 287.1 et seq. The contractor shall not illegally bury, dump, or discharge any building material or wastes.

Wastes generated during the construction of this project shall be recycled if at all possible. Any materials that cannot be recycled or reused shall be disposed of at a Pennsylvania Department of Environmental Protection approved landfill. If soil and/or rock disposal areas are required, erosion and sedimentation controls shall be implemented at these areas. Any excess soil waste may only be disposed of at an approved E&S/NPDES permitted site.

Staging of Earthmoving Activities

Notes: 1.) All permanent and temporary seeding shall be done within 72 hours of the completion of disturbances for all areas requiring vegetative cover.

2.) Silt Socks must be placed and maintained downslope of all topsoil stockpiles. Topsoil stockpiles must also be seeded with the temporary seeding mixture.

3.) During construction all sediment washed, tracked or spilled onto public right–of–ways must be cleaned up immediately.

4.) In order to avoid compaction of the proposed infiltration sump bottom, special procedures shall be implemented as follows:
a. The final excavation shall be completed utilizing equipment located outside the infiltration sump bottom area.

5.) Failure to correctly install sediment control facilities or failure to prevent sediment laden runoff from leaving the construction site or failure to take corrective actions to immediately resolve failures of sediment control facilities may result in administrative, civil and/or criminal penalties being instituted by the Pennsylvania Department of Environmental Protection as defined in Section 602 of the Clean Streams Law of Pennsylvania. The Clean Streams Law provides for up to $10,000 per day in civil penalties, up to $10,000 in summary criminal penalties, and up to $25,000 in misdemeanor criminal penalties for each violation.

Construction Staging

All earth disturbance activities shall proceed in accordance with the following staging of earthmoving activities. Each stage shall be completed before a subsequent stage is initiated.

A. Install the rock construction entrances for the northern portion of the site as shown on the Erosion and Sedimentation Control Plan (E&SCP). Install the entire proposed silt sock, as shown on the (E&SCP).

B. Place inlet protection on existing inlets as shown on the E&SCP.

C. Demo the existing homes and structures onsite.

D. Install the second rock construction entrance as shown on the E&SCP.

E. Strip the topsoil from the site and stockpile the topsoil on the topsoil stockpile as shown on the E&SCP. Seed the topsoil stockpile with the temporary seeding mixture, and place silt sock on the downslope side of the topsoil stockpile.

F. Begin rough grading the site. Install rock as rough grading permits near the infiltration sump area, do not run heaving equipment/excavators overtop of this area.

G. Begin building construction.

H. Install storm sewer run from EX–1 to I–4.

I. Begin installing the 48" underground stormwater facility and infiltration sump. Installation of these facilities shall include the outlet structure, inlets and outfall pipe system. Once the sump installation is complete, immediately reestablish any disturbed portion of the rock construction entrance.

J. Continue with site grading, and begin installing all remaining utilities and stormsewer installation, working from the very downslope of each line and proceeding upslope. The amount of utility installation shall coincide with the amount of trenching that can be excavated and backfilled daily. Install inlet protection on all inlets, as shown on the E&SCP.

K. Once all parking areas are stabilized with stone, remove the construction entrances. Commence all paving and curbing installation. Install all site sidewalks.

L. As all lawn areas are brought to grade, stabilize these areas immediately with topsoil and the permanent seeding mixture.

M. Check all erosion controls on a daily basis and make any needed repairs or replacements as needed immediately. Any erosion control disturbed or removed by the installation of utilities shall be repaired or replaced to proper functioning condition by the end of that same day.

N. Current regulations state: (a) Upon completion of an earth disturbance activity or any stage or phase of an activity, the site shall be immediately seeded, mulched or otherwise protected from accelerated erosion and sedimentation. (b) Erosion and sediment control BMP's shall be implemented and maintained until the permanent stabilization is completed. (c) For an earth disturbance activity or any stage or phase of an activity to be considered permanently stabilized, the disturbed areas shall be covered with one of the following: (1) A minimum uniform 70% perennial vegetative cover, with a density capable of resisting accelerated erosion and sedimentation. (2) An acceptable BMP which permanently minimizes accelerated erosion and sedimentation. (3) Pavement, curbing and sidewalk, where applicable. Once stabilization has been achieved, all temporary erosion and sediment controls may be removed. These controls include inlet protection, topsoil stockpiles, and silt socks. Stabilize any areas disturbed by the removal of these controls immediately with the permanent seeding mixture.

Temporary Control Measures

Temporary control measures will be implemented to ensure that erosion is minimized and that sediment is retained during construction. Silt sock will be placed at the locations shown on the Erosion and Sedimentation Control Plan to provide proper filtration of the site runoff. Inlet protection will be installed at inlets to prevent the sedimentation of the storm sewer systems. A topsoil stockpile will be provided for a convenient place to store onsite topsoil.

Temporary seeding on all disturbed areas shall be done immediately after grading is finished and shall consist of the following:

Item	Rate
1. Agricultural grade limestone	1 ton / acre
2. Fertilizer 10–10–10	50 lbs. / acre
3. Annual ryegrass	40 lbs. / acre
4. Mulch (straw)	3 tons / acre

Permanent Control Measures

Permanent control measures include the storm sewer conveyance systems, grate inlet skimmer boxes, infiltration trench and curbing and seeding / landscaping. Seeding specifications are for graded or cleared areas where permanent vegetative cover is needed.

Soil Enhancements: It is recommended that site specific soil testing be performed. Lieu of soil test recommendations, use one of the following schedules.

1) Preferred – Apply 6 tons per acre Dolomitic Limestone (240 lbs/ 1000 s.f.) and 1000 lbs/acre 10–20–20 (25 lbs/ 1000 s.f.) before seeding. Harrow or disc into upper three inches of soil. At time of seeding, apply 400 lbs per acre 30–0–0 ureaform fertilizer (91 lbs/ 1000 s.f.).

Permanent Seeding shall consist of the following:

Item	Rate
1. Seed Mixture Consisting of	102 lbs./acre
50% Poa pratensis (Kentucky Bluegrass)	
30% Festuca rubra (Creeping Red Fescue)	
20% Lolium perenne L. (Perennial Rye)	
2. *Mulch (straw)	3 tons/ acre

*Mulching: 3 tons/acre
Apply mulch immediately after seeding and anchor properly with an anchoring tool or following one of the methods listed below.

1) Tracking: The process of cutting mulch into the soil via equipment that runs on tracks, is employed primarily on slopes 3:1 or steeper.
2) Mulch Nettings: Staple lightweight biodegradable paper, plastic or cotton netting over the mulch according to the manufacturer's recommendations.
3) Synthetic Binders: Synthetic binders such as acrylic DLR (AGRI–TAC), DCA–70, Petroset or Terratack may be used at rates recommended by the manufacturer to anchor mulch material.
4) Wood Cellulose Fiber: The fiber binder shall be applied at a net dry weight of 750 lb/acre. The wood cellulose fiber shall be mixed with water, and the mixture shall contain a maximum of 50 lbs of wood cellulose fiber per 100 gallons.
5) Peg & Twine: Drive 8 to 10 inch wooden pegs to within 2 to 3 inches of the soil surface every 4 feet in all directions. Stakes may be driven before or after applying mulch. Secure mulch to surface by stretching twine between pegs in a criss–cross within a square pattern. Secure twine around each peg with two or more turns.

Maintenance Program

During construction, the contractor will be responsible for maintenance and repair of all erosion and sedimentation control facilities. These facilities should be inspected weekly and after every runoff event. Any erosion control disturbed during construction or found to be inadequate upon inspection shall be repaired or replaced within 24 hours after the disturbance or the discrepancy is discovered. The maintenance of the erosion control facilities will include the following:

During inspection of these facilities, written documentation for each inspection for all BMP repair, replacement, and/or maintenance activities shall be completed using the DEP Form 3800–FM–BCW0271d (A copy of this form is located in the Appendix of this report). Inspection reports should be kept onsite at all times.

Construction Entrance:

a. The entrance shall be maintained in a condition that will prevent tracking or flowing of sediment onto public rights–of–way. This may require periodic top dressing with additional stone as conditions demand and repair and/or cleanout of any measure used to trap sediment. All sediment spilled, dropped, washed or tracked onto public rights–of–way must be removed immediately. Sediment removed from the structure shall be spread over an existing stockpile with controls already in place and be seeded with the temporary seeding mixture.

Inlet Protection:

a. Inlet filter bags should be inspected on a weekly basis and after each runoff event. Needed repairs should be initiated immediately after the inspection.
b. Filter bags should be cleaned and/or replaced when the bag is ½ full. Damaged bags should be replaced.

Silt Socks:

a. The Contractor shall maintain the socks in a functional condition at all times and it shall be routinely inspected.
b. Where the sock requires repair, it will be routinely repaired.
c. The contractor shall remove sediment collected at the base of the sock when they reach 1/2 of the exposed height of the sock, or as directed by the Engineer. Alternatively, rather than create a soil disturbing activity, the engineer may call for additional sock to be added at areas of high sedimentation, placed immediately on top of the existing sediment laden sock.
d. The sock will be dispersed on site when no longer required, as determined by the Engineer.

Topsoil Stockpiles:

a. The topsoil stockpiles shall be seeded with the temporary seeding mixture to ensure proper stabilization. Any additional topsoil spread at these locations shall also be seeded with the temporary seeding mixture.

Permanent Seeding:

a. If the vegetative cover is not established uniformly by the third mowing, the contractor shall reapply topsoil if necessary and seed and mulch as needed to provide adequate cover.

PennTerra
ENGINEERING INC.

CENTRAL PENNSYLVANIA REGION OFFICE:
3075 ENTERPRISE DRIVE
SUITE 100
STATE COLLEGE, PA 16801
PH: 814–231–8285
Fax: 814–237–2308

LANCASTER REGION OFFICE:
3904 B ABEL DRIVE
COLUMBIA, PA 17512
PH: 717–522–5031
Fax: 717–522–5046

WWW.PENNTERRA.COM

COPYRIGHT 2019 BY THE ENGINEER
THE INFORMATION CONTAINED HEREON MAY NOT BE USED OR COPIED IN ANY MANNER WITHOUT THE WRITTEN PERMISSION OF THE ENGINEER EXCEPT AS OTHERWISE PROVIDED BY APPROPRIATE LAWS OR STATUTES.
© PENNTERRA ENGINEERING 2019
ALL RIGHTS RESERVED

COMMONWEALTH OF PENNSYLVANIA
REGISTERED PROFESSIONAL
JOHN C. SEPP
ENGINEER
040003–E
Seal

Seal

Designer RRK
Draftsman JDB
Proj.Manager JCS
Surveyor ----
Perimeter Ck.
Book ---- Pg ----
Drive Layout 16094–ES3
Acad ES2–24'X36'

Date	Description
12–3–19 MLH	REVISED PER TWP COMMENTS
11–1–19 MLH	REVISED PER TWP COMMENTS

REVISIONS

WEST CHERRY LANE MULTI USE BUILDING

FERGUSON TOWNSHIP
CENTRE COUNTY
PENNSYLVANIA

PRELIMINARY/FINAL LAND DEVELOPMENT PLAN

EROSION AND SEDIMENTATION CONTROL NARRATIVE

PROJECT NO. 16094.01
DATE SEPTEMBER 12, 2019
SCALE N.T.S.
SHEET NO. ES3

P:\ddtproj\2016\16094\dwg\plot files\final plans\FINAL PLANS - REVISED\16094-ES3.dwg, 12/4/2019 11:52:02 AM, 1:1

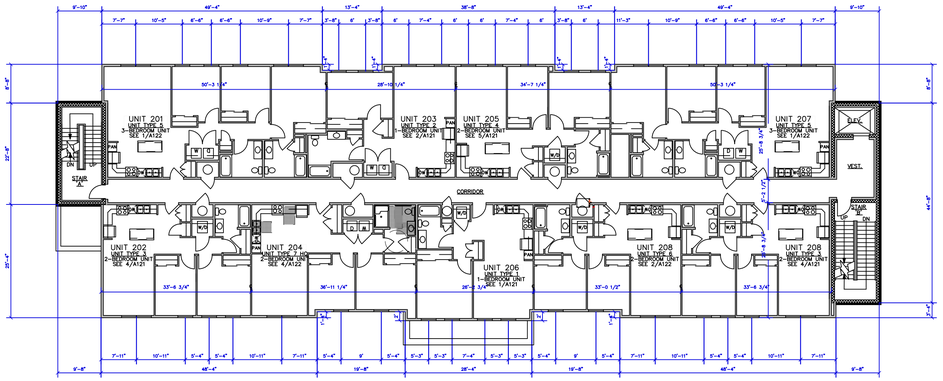

SECOND FLOOR PLAN

SCALE: 1/16" = 1'-0"

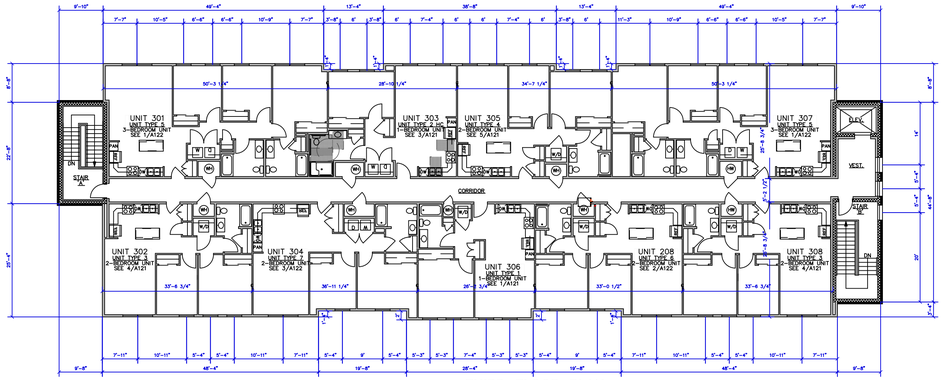

THIRD FLOOR PLAN

SCALE: 1/16" = 1'-0"

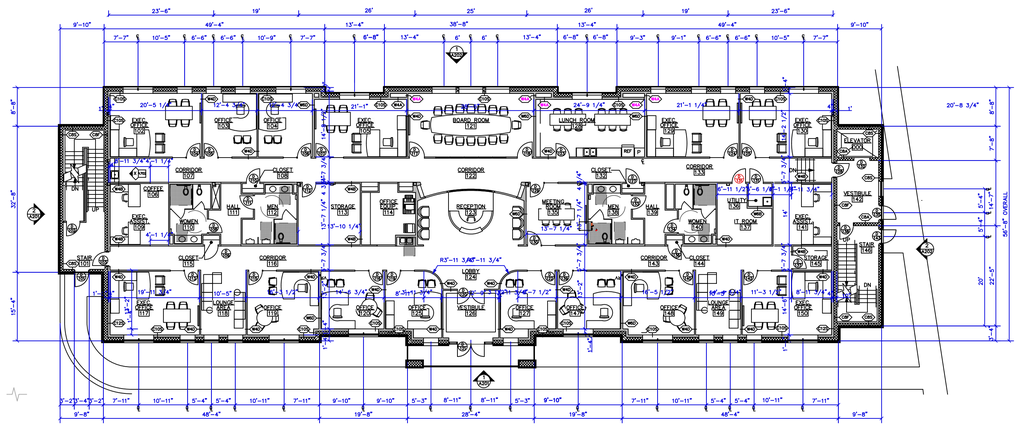

FIRST FLOOR PLAN

SCALE: 1/16" = 1'-0"

SOUTH ELEVATION

SCALE: 1/16" = 1'-0"

NORTH ELEVATION

SCALE: 1/16" = 1'-0"

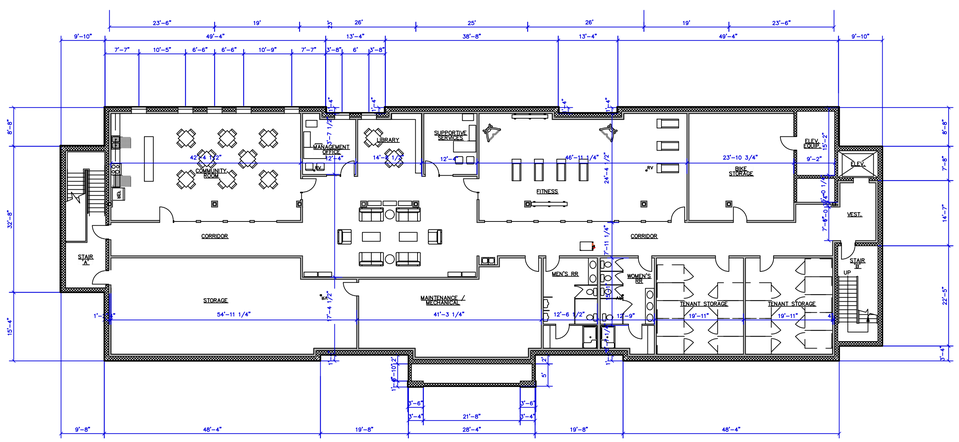

BASEMENT FLOOR PLAN

SCALE: 1/16" = 1'-0"

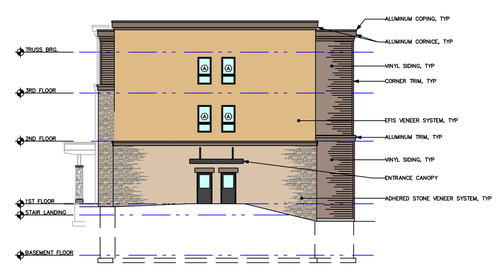

EAST ELEVATION

SCALE: 1/16" = 1'-0"

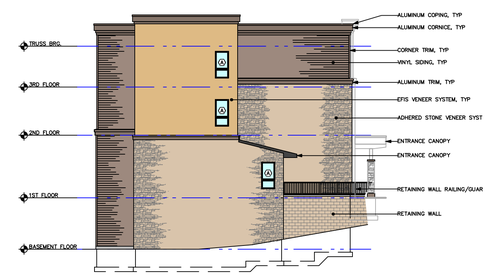

WEST ELEVATION

SCALE: 1/16" = 1'-0"

VILLAGE DRIVE - MIXED USE BUILDING

STATE COLLEGE, PA

UpStreet Architects, Inc.©

541 PHILADELPHIA STREET
PHONE (724) 349-2520

INDIANA, PA 15701
FAX (724) 349-5779

175003

PennTerra ENGINEERING INC.

CENTRAL PENNSYLVANIA REGION OFFICE:
3075 ENTERPRISE DRIVE
SUITE 100
STATE COLLEGE, PA 16801
PH: 814-231-8285
Fax: 814-237-2308

LANCASTER REGION OFFICE:
3904 B ABEL DRIVE
COLUMBIA, PA 17512
PH: 717-522-5031
Fax: 717-522-5046

WWW.PENNTERRA.COM

COPYRIGHT 2019 BY THE ENGINEER
THE INFORMATION CONTAINED HEREON MAY NOT BE USED OR COPIED IN ANY MANNER WITHOUT THE WRITTEN PERMISSION OF THE ENGINEER EXCEPT AS OTHERWISE PROVIDED BY APPROPRIATE LAWS OR STATUTES.
© PENNTERRA ENGINEERING 2019 ALL RIGHTS RESERVED

Seal

Seal

Designer	RRK
Draftsman	JDB
Proj.Manager	JCS
Surveyor	----
Perimeter Ck.	
Book ----	Pg ----
Drive	Layout 16094-A1-ARCH
Acad	24X36 (S)

Date	Description
12-3-19 MLH	REVISED PER TWP COMMENTS
11-1-19 MLH	REVISED PER TWP COMMENTS

REVISIONS

WEST CHERRY LANE MULTI USE BUILDING

FERGUSON TOWNSHIP
CENTRE COUNTY
PENNSYLVANIA

PRELIMINARY/FINAL LAND DEVELOPMENT PLAN

BUILDING ARCHITECTURAL PLANS

PROJECT NO. 16094.01

DATE SEPTEMBER 12, 2019

SCALE AS SHOWN

SHEET NO. **A1**

P:\ldd\proj\2016\16094\dwg\plot files\final plans\FINAL PLANS - REVISED\16094-A1-ARCH.dwg, 12/4/2019 11:52:14 AM, 1:1